GB1 TEMPERATURE CONTROLLER

INSTRUCTION MANUAL

Digitry Company, Inc.

449 Forest Avenue, Suite 9
Portland, ME 04101

27 January 1015

Contents

List of Figures

Chapter 1

Description of the GB1

1.1 Features and Benefits

Versatility is a key advantage of your GB1 Programmable Temperature Controller. The following features are incorporated into your GB1 to maximize user benefits.

- Defining up to 15 set-points per profile broadens creative boundaries through a nearly limitless number of temperature profile options.
- Independent time-temperature control lets you set your own work schedule. No need to be on-site for set-point changes or to fire up during costly peak energy times.
- Ease of operation lets you program the GB1 in a natural way. With the push of a few keys, you can program almost 100 hours of automatic control per step, for a total of just shy of 1500 hours (almost nine weeks); very much longer if you link profiles.
- Automatic calculation and monitoring of slope between set-points eliminates time consuming and awkward manual temperature adjustments while achieving smooth ramping.
- Temperature and ramping accuracy controls oven temperature to expand product range and creativity. Auto-hold feature ensures preset temperature is reached.
- Manual overrides:
  - Skip-step capability increases programming flexibility by jumping to the following step with the push of a few buttons. This is particularly useful when fusing and slumping.
  - Keypad hold extends the current step beyond its specified time and allows the hold temperature to be altered — instant setpoint control.
- Profile linking greatly enhances flexibility, total time, and number of steps.
- Delayed start allows oven to start heating, so it will be ready when needed.
- Automatic memory back-up retains your profile if electricity fails, resuming operation, if appropriate, and holding at temperature in other cases, thus helping to protect your product from damage.

- Large LED display clearly indicates profile number, current step and time remaining for that step, temperature, mode, and status, throughout a profile.
- Built-in connection for alarm that warns of abnormal conditions such as thermocouple burn-out.
- Key lock prevents accidental or unauthorized profile changes (optional).
- Voltage transient protection to help protect from malfunction caused by electrical disturbances.
- Standard features include solid-state circuitry, durable construction, input for Type K thermocouple, automatic cold junction compensation, readings in Fahrenheit (Celsius, optional), product warranty and full corporate technical support.
- Versions are available for Type R or Type S thermocouples.
- System options include programmable auxiliary relays ("event relays"), key lock security, door interlock capability, proportional solid-state control, 4–20 milliamp control, chart recorder-like output for PCs, graphing software for Windows PCs.
- Digitry also sells specialized plug-boxes for instant installation of commonly available kilns, and solid-state, mechanical and mercury relays ("contactors") of various sizes.

A diagram of the face of the GB1 is shown in figure 1.1. Refer to this drawing as you read through Chapter 2 to learn the system layout.

1.2 Modes

There are two modes of operation for your GB1: MONITOR and PROGRAM. During standard operations, you will usually keep your GB1 in MONITOR MODE. When entering, changing or examining temperature profiles, the GB1 must be in PROGRAM MODE.

For those GB1s that have proportional output, the MONITOR mode has two display choices: remaining time and power level. Added to the PROGRAM mode, these two MONITOR displays may give the user the impression that there are three modes.

1.3 Status Indicator Lights

There are two sets of indicator lights on the face of the GB1. The two mode lights are above and below the STEP display. The four system status indicator lights are directly beneath the HOURS/MINUTES display.

MONITOR MODE: When the green MONITOR light is on, the GB1 displays the time and temperature. (Your oven is constantly monitored by the GB1, even when the MONITOR light is not lit.)

PROGRAM MODE: When the red PROGRAM light is on, the GB1 is ready to receive, examine, or change temperature profiles. Note that if a profile has already been started, it will continue to execute.

The MODE button on the keypad (see page 8) is used to switch between MONITOR and PROGRAM MODE.

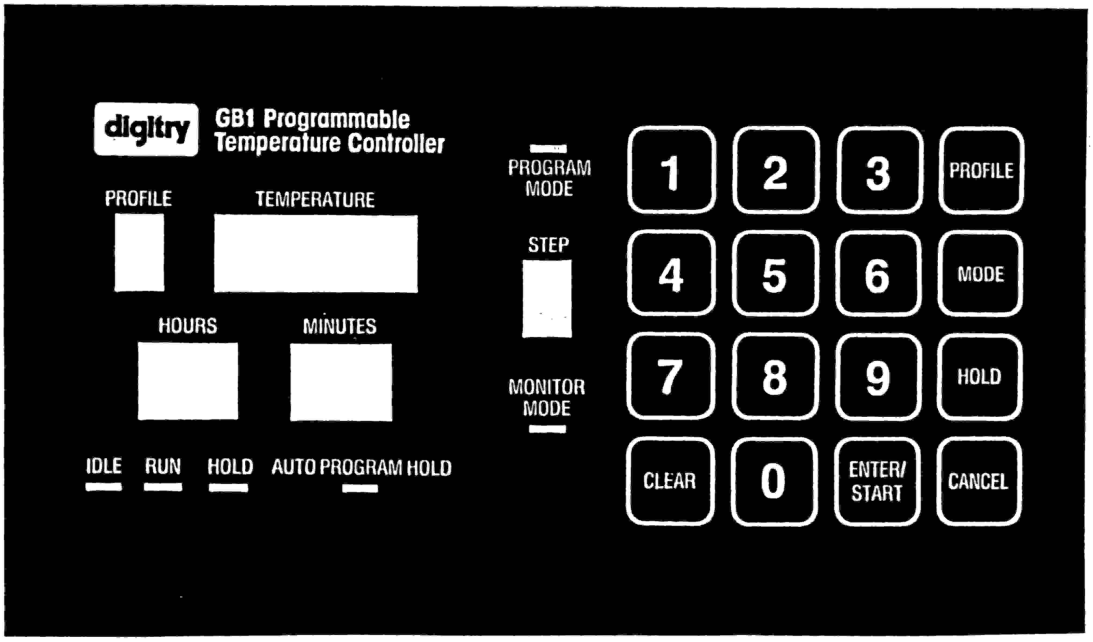

Figure 1.1: GB1 Face

IDLE: The red IDLE light indicates that the control power is off and the timer is not running. Therefore, your oven is ready to begin STEP #1 of your profile. Once the profile has completed its cycle, the GB1 automatically returns to IDLE. Resetting your oven using the CANCEL button (see page 10) also forces the GB1 into IDLE.

RUN: The green RUN light indicates that your oven has been activated and is following your profile.

HOLD: The yellow HOLD light indicates that the HOLD Button has been pushed, placing your oven in an indefinite hold ("soak"). In effect, this provides an instant setpoint, a manual version of the programmed HOLD function that is indicated by HHHH in the TIME display. These are both described in section 1.5, page 8.

AUTO-HOLD: The yellow AUTO-HOLD light indicates that the actual temperature is far below or above the calculated profile temperature. This situation occurs when the programmed slope (calculated automatically according to the time and temperature set-points you entered into your profile) is too steep to be achieved by your oven's capability to heat up or cool down. When this light appears, the timer stops and will remain stopped until the actual temperature comes within the required range.

1.4 Numerical Displays

There are four LED displays on the face of the GB1: one digit each for the UNIT and the STEP, four digits for the TEMPERATURE, and four digits for the TIME. Under most circumstances, each indicates information either about a profile being entered or about an oven being controlled. At other times, power level or error messages may appear in the TIME and TEMPERATURE displays. These are described in other sections of this manual.

PROFILE: This display indicates the profile number that currently is being executed or programmed.

TEMPERATURE: This display indicates temperature in Fahrenheit (or Celsius, if your GB1 was ordered with this option). In MONITOR MODE, this is the reading from your thermocouple; in PROGRAM MODE, it is the final temperature of a given step.

TIME: This display shows the time in the current step. The time indicated when the GB1 is in PROGRAM MODE denotes the length the step. When programming, the letter "H" will be displayed to indicate a programmed hold or soak of indefinite length, and the letter "L" will be displayed to indicate a link to another profile.

In MONITOR MODE, the display shows the remaining time of the current step, and diminishes as the step nears completion. The timer is running whenever the green RUN light is on unless the oven is in program HOLD ("HHHH"s in the display), keypad hold (the yellow HOLD light is on), or AUTO-HOLD (yellow AUTO PROGRAM HOLD light is on). When the GB1 is in any of these hold conditions, the displayed time does not change.

With proportional control versions of the GB1, the MONITOR MODE supports two different display modes, which differ only in what is shown in the bottom display. The first display mode is the normal one described above. The second one replaces the time with a power level display. The letters "PL" show, followed by a 2 digit number representing the percentage of power called for. Because of the limitation of the display, 99% is the highest power shown, even when the level is really 100%.

STEP: In MONITOR MODE, the number displayed directly to the left of the keypad indicates the current step of the profile you are executing. When a profile has just finished running, the GB1 will go into the IDLE MODE and, to indicate that the profile has finished, the STEP display will show the last step of your profile, with zero time remaining. As soon as you switch modes or profiles, this display will change to show a STEP of "1", with the TIME replaced by dashes "– – – –".

In PROGRAM MODE, this display indicates the step you are entering or reviewing. The steps are indicated by the numbers "1" through "9", and then "A" for the tenth step, "b" for the eleventh step, and so forth, up to "F" for the fifteenth step (the maximum number that can be programmed for any one profile)[1]. Dashes will appear in the TIME and TEMPERATURE displays if you try to enter more than 15 steps per profile or if you try to view a step after a Link "LL LL".

1.5 Keypad

The keypad on the face of the GB1 consists of 16 buttons. There are 10 numerals, 0–9; and six special function buttons, labelled PROFILE, MODE, HOLD, CANCEL, CLEAR, and ENTER/START. The chart in Figure 1.2 summarizes the functions performed in each operating mode.

PROFILE is used to choose the profile you want to run or to program. Simply push PROFILE and then push the number of the profile you wish to display. This will automatically select PROGRAM MODE and display step 1 of the profile. The number of the profile you select appears in the upper left hand corner of the GB1, below the word PROFILE.

While in MONITOR MODE, if the oven is running, you can display its target temperature by pressing PROFILE followed by the MODE key. The target temperature is calculated minute-by-minute to move evenly from the temperature at the start to the temperature at end of the current step; *i.e.*, the target temperature follows the ramp up or down between the beginning and end of the step.

When displaying the target temperature, the temperature will flash to indicate that this is a calculated temperature and not the actual temperature of the kiln. To revert back to the normal display, you may press any key, or you may simply wait a few seconds. Also while the target temperature is flashing, the elapsed time of the current step will be shown, as opposed to the usual display of the remaining time for the step. (Note however that for GB1s configured to work with cumulative time, the usual display is not the remaining time, but the total elapsed time of the program.) Time while the AUTOHOLD light is on is not counted. The maximum time the clock can display is 99:59. So any time from 100 hours on is simply shown as the maximum.

If a keypad hold has been invoked (see section 1.5, page 8) the time shown will be the time that has elapsed since the last time the HOLD button was pushed, subject to the same 99:59 limit above.

MODE is used for switching between MONITOR MODE and PROGRAM MODE. The mode you select is indicated by a light to the left of the keypad: red for PROGRAM MODE, green

[1] Some of these letters are uppercase and some are lowercase, because of the limitations of their 7-segment display format.

Button	In PROGRAM MODE[1]	In MONITOR MODE
PROFILE (pushed once followed by digit)	Selects profile for viewing or changing	Selects profile for viewing or changing (also changes mode to PROGRAM MODE)
(pushed once followed by ENTER)	Backs up to previous step	
(pushed once followed by MODE)		Displays current target temperature
(pushed twice)	Returns to beginning of profile for review	
MODE[2]	Selects MONITOR MODE	Selects PROGRAM MODE
CLEAR	Clears entries so changes can be made	Clears errors; temporarily disables BAD1 and BAD2
HOLD (pushed once)	Denotes a hold, or soak, at a specified temperature	Holds oven at current temperature[3]
(pushed twice followed by digit)	Designates link to another profile	
(pushed three or more times)	Toggles Auxiliary Relay[4] on and off	
ENTER/START	Completes a profile entry	Starts, restarts or skips steps in a profile
CANCEL	Erases the entire profile[5]	Cancels a profile and returns to IDLE

NOTES:

1. A profile may continue to execute even while another profile is displayed or altered.
2. Proportioning GB1s have two monitor modes, one that displays power level and one that displays time. Pressing MODE advances along the cycle PROGRAM MODE → MONITOR TIME MODE → MONITOR POWER LEVEL MODE → PROGRAM MODE → $\cdots$.
3. This temperature can be altered. See section 1.5, page 8.
4. This action is available only on those GB1s that have the optional Auxiliary Relay (described in section 2.6, page 18).
5. The running profile cannot be erased; the oven must first be returned to IDLE.

Figure 1.2: Keypad Functions

for MONITOR MODE, each labelled appropriately. With proportional output GB1s, this key cycles through the following sequence: time monitor mode, power level monitor mode, program mode, then back to time monitor mode.

The behavior of the MODE key depends on whether or not a profile is currently running. If a profile is currently running, changing from PROGRAM MODE to MONITOR MODE automatically changes the selected profile to the one that is running. If your oven is idle, changing from PROGRAM MODE to MONITOR MODE does not change the selected profile.

MONITOR MODE is used for observing the status of your oven including the temperature and the remaining time of the current profile, if one is running. In MONITOR MODE you can perform any of the following functions:

- Start a profile (see "ENTER/START", page 9).
- Initiate a non-programmed hold (see "HOLD", page 8).
- Skip a step in a profile that is running (see "ENTER/START", page 9).
- Leave a programmed or a keypad hold to continue the profile (see "ENTER/START", page 10).
- Cancel the cycle (see "CANCEL", page 10).
- Select a profile for examination (see "PROFILE", page 5).

PROGRAM MODE allows you to enter, review, or change the times and temperatures that constitute your currently selected profile. See chapter 3, page 11, for details.

CLEAR is most commonly used when the GB1 is in PROGRAM MODE to allow entries to be changed. In MONITOR MODE, CLEAR is used to clear various error indications.

In PROGRAM MODE, CLEAR is used to clear entries that you need to change. If only a time has been entered, then pushing CLEAR clears it. If both a time and a temperature have been entered in a step, pushing CLEAR once will clear only the temperature. If you do not want to change the time, you then can enter a new temperature setting. If you do want to clear both the existing time and temperature setting, push CLEAR twice; the first time to clear the temperature, the second to clear the time. You then can enter your new settings. While altering a profile during review, there is no way to clear the time without first clearing the temperature.

If the GB1 is running a profile, you cannot alter, and hence you cannot clear, the current step. However, you can alter the rest of the program.

NOTE: If your display reads all "E"s (error in entry), you must push CLEAR in order to proceed. (See section 2.2 for a further explanation.)

In MONITOR MODE, pressing CLEAR when an error is present simply clears the error. However, pressing CLEAR when no error is present disables abnormal temperature warnings (BAD1, BAD2) for 45 minutes from the last time it was pushed. This allows you to open your oven and insert a piece or "crash cool" without unnecessarily triggering an alarm. This is discussed in more detail in section 3.4, page 21. When you press the CLEAR key in MONITOR MODE, both the TIME and TEMPERATURE displays momentarily show "– – – –" to acknowledge the button press.

HOLD is mainly used to instruct the GB1 to keep the oven at a chosen temperature, in both PROGRAM MODE and MONITOR MODE.

In PROGRAM MODE, the HOLD key serves one or two additional functions when pressed more than once:

- linking, described in section 2.4, page 16, and
- controlling an auxiliary relay. If your GB1 has this optional feature, its use is described in an additional instruction sheet.

Do not use the HOLD key for a timed soak. Program this as a pair of steps with the same temperature (see section 2.1, page 11).

Pushed once while in PROGRAM MODE, the HOLD button is used to designate an untimed soak at a determined temperature. Once the button is pushed, the hold is indicated by "HHHH" in the TIME display. The temperature is specified in the normal manner (see section 2.2, page 13). When this hold is reached while the profile is running, your oven will continue to hold at the indicated temperature forever or until you release it by pressing the ENTER/START button immediately followed by the profile number, which instructs the running profile to continue to the next step after the HOLD.

Tip: You can start your annealing profile with a HOLD at your annealing temperature. When run, this causes the oven to heat to this temperature as quickly as possible. Then, place each piece in the oven as it is completed. When your oven is loaded, end the HOLD using the ENTER/START sequence described above, and the GB1 will continue with the rest of your annealing profile.

Keypad Hold with Adjustable Setpoint

In MONITOR MODE, pushing HOLD does nothing if the GB1 is IDLE; however, if the GB1 is running, HOLD immediately initiates a hold at the current temperature of the oven. We call this a "keypad hold" to distinguish it from the programmed hold described above. During any hold, the internal clock stops, so the GB1 acts like a setpoint controller.

To exit a keypad hold and resume normal operation, push ENTER/START immediately followed by the profile number. The program will resume from the point at which you began the keypad hold.

The keypad hold is particularly useful in fusing and slumping, or indeed any procedure where you are waiting for the glass to behave in a certain way. For example, if a slump is not happening when expected, you can extend the step manually using the keypad hold.

Some processes need even more flexibility, so in addition to stretching out the time by stopping the internal clock, you can also alter the temperature at which the oven will hold. This means you have an *adjustable* instant setpoint.

Here is how to change this setpoint temperature: When a keypad hold is started, the yellow HOLD light will come on. If you do not wish to change the holding setpoint temperature, you need do nothing until you want to end the keypad hold.

As mentioned above, while in keypad hold mode, you may temporarily change the setpoint temperature. To do so, proceed as follows:

1. Press the MODE key once (or twice if your GB1 is configured for PID and shows the Power Level) until PROGRAM MODE lights. At this point, the TIME display will become blank (because the keypad hold continues indefinitely until you end it) and the TEMPERATURE display will display the setpoint target temperature.

2. To change the setpoint target temperature, you must first clear it with the CLEAR key and then
3. use digit keys to specify the desired setpoint target temperature. Note that digit keys pressed before the temperature is cleared are simply ignored.
4. Once you have specified the desired temperature, press the ENTER/START key to enter that temperature. The MONITOR MODE will light, and the kiln will use the entered temperature as its target.

Until you actually enter the new temperature with the ENTER/START key, the GB1 will continue to use the original setpoint as its target temperature.

If you don't complete entering the new setpoint target temperature (*i.e.*, if you don't press ENTER/START, step 4), after a few seconds, the GB1 will revert to MONITOR MODE. The keypad hold will still be in effect, using the original setpoint target temperature. Note that this means if you key in a new target setpoint temperature but neglect to push the ENTER/START key, after a few seconds the GB1 will show the current temperature and ignore the attempted change to the setpoint temperature, because the entry was not completed. You can always check the setpoint target temperature using the PROFILE – MODE sequence, as shown in section 1.5, page 5.

Tip: If you decide you don't want to change the temperature after you press the CLEAR key in step 2 above, you can return to monitoring the keypad hold by pressing the MODE key or by doing nothing for several seconds. As noted above, the setpoint target temperature will not have been changed. However, once you have cleared the temperature, you may press the ENTER/START key to return to MONITOR MODE, and in doing so, you will cause the displayed temperature to become the target temperature, even if it is zero. If this is not what you want, press HOLD again to restart the keypad hold at the current temperature.

Each time you press the HOLD key, you restart the keypad hold, which will hold at the then current temperature and zero the timer that records how long the hold has been in effect. You can see this time, using the PROFILE – MODE sequence, as described in section 1.5, page 5.

Confirmation Sequence
The keys described below, ENTER/START and CANCEL, are used to start your oven, skip steps in your profile, erase your profiles or reset your oven to STEP #1. Because of the importance of these functions, the GB1 requires that you enter a special sequence, as a safety mechanism to avoid accidental use. After pressing ENTER/START or CANCEL, you must push the number of the currently selected profile. Pushing any other button after ENTER/START or CANCEL will disable the prior ENTER/START or CANCEL. For ENTER/START, this feature is active only when the GB1 is in MONITOR MODE. For CANCEL, it is always in effect whether the GB1 is in MONITOR or PROGRAM MODE.

Important Note: Anytime the confirmation sequence is required, the confirming profile number must be pressed within a few seconds. If it is not done quickly enough, you must start the sequence over.

ENTER/START serves a different function depending on the mode of the GB1: in PROGRAM MODE, it serves as the enter button, as described in detail in Chapter 3 starting at page 11. Here we describe the use of the ENTER/START button in MONITOR MODE.

Starting the oven
There are four steps to starting your oven:

1. Make sure that no profile is already running (*i.e.* that the red IDLE light is on).[2]
2. Pick your profile.
3. Change to MONITOR MODE. The green MONITOR MODE will come on.
4. Press ENTER/START, immediately followed by the number of the profile. The red IDLE light will go out and the green RUN light will come on, showing that your program has started.

Skipping a step
At any time during the cycle you may terminate a given step and go on to the next step. Push ENTER/START and then press the number of the running profile. The GB1 will skip to the next programmed step. Once you have skipped a step, there is no direct way to back up. However, you can always cancel the whole cycle (CANCEL), restart the profile and skip to the beginning of any step.

Leaving a HOLD
ENTER/START also is used to continue your profile from HOLD. Leaving a programmed HOLD is, after all, nothing more than skipping to the next step.

We now describe the use of the ENTER/START button in PROGRAM MODE.

When the GB1 is in PROGRAM MODE, ENTER/START is used to enter the times and temperatures you select for your profile. The Confirmation Sequence feature is not in effect in this mode. After selecting any time or temperature, you must press ENTER/START to record your entry into the GB1's memory. Then, proceed to your next entry. If the GB1 detects an incorrect entry, "E"s appear in the TIME or TEMPERATURE, as appropriate, and you must press CLEAR to proceed (see 2.2, page 13).

ENTER/START is also used to review your profile as described in section 2.3, page 13.

CANCEL is active in both MONITOR and PROGRAM MODE. In MONITOR MODE, it is used to cancel a profile and return the GB1 to IDLE. This does not erase your profile; it shuts your oven off and returns the profile to STEP #1.

In PROGRAM MODE, CANCEL erases your entire profile. Once you press CANCEL, remember that you must then enter the number of the profile. Failure to do this will trigger the Confirmation Sequence feature described above (see page 9) and the CANCEL function will be cancelled.

If your GB1 is running a profile, you cannot erase this profile. To do so, you must first return the oven to IDLE.

[2] If a profile is running, you must first cancel it before you can start a new profile.

Chapter 2

Programming

2.1 Introduction

A profile for the GB1 may be thought of as a series of points, with each point consisting of a time and a temperature. When these points are connected by straight lines, they form a continuous graph. This graph represents the temperature profile you want your oven to follow. You program your GB1 by entering these time-temperature points. The time you enter is always the length of the step; the temperature is in Fahrenheit or Celsius, depending on your GB1. Your GB1 automatically calculates the rate ("ramp") at which the temperature rises or falls between successive time-temperature points.

Some people are used to being forced to describe temperature profiles in terms ramp rates up and down, expressed as degrees per minute, and in terms of timed soaks. The GB1 relieves you of the calculations required to specify profiles in this arcane manner.

For example, your oven is at 100°. In 2 hours, you want it to reach 500°. Then, in 3 more hours you want your oven to be at 650°. The only information you must enter is the two time-temperature points: 2 hours, 500°; and 3 hours, 650°. The GB1 then calculates and executes the ramp up between 100° and 500° in 2 hours, as well as a different ramp rate up from 500° to 650° in 3 hours.

A profile may consist of up to 15 such points, each of which is called a *step*. If you wish to hold a specific temperature for an indefinite period of time, you can use HOLD (see page 8). The HOLD acts as a substitute for a time setting. During a HOLD, the timer does not run, so there is no remaining time period to display. Instead, the GB1 displays "HHHH". When you are ready to continue with the program, you have to advance the GB1 to the next step manually (see page 10). A programmed HOLD counts as one step.

If you wish to maintain a certain temperature for a specific time (a "timed soak"), you simply program it in the standard manner, using the same temperature for two consecutive set-points. For example, the following program ramps up to 950° over an eight hour period and then soaks at 950° for two hours before shutting off.

800	ENTER/START	(eight hours)
950	ENTER/START	(950°)
200	ENTER/START	(two hours)
950	ENTER/START	(950°)

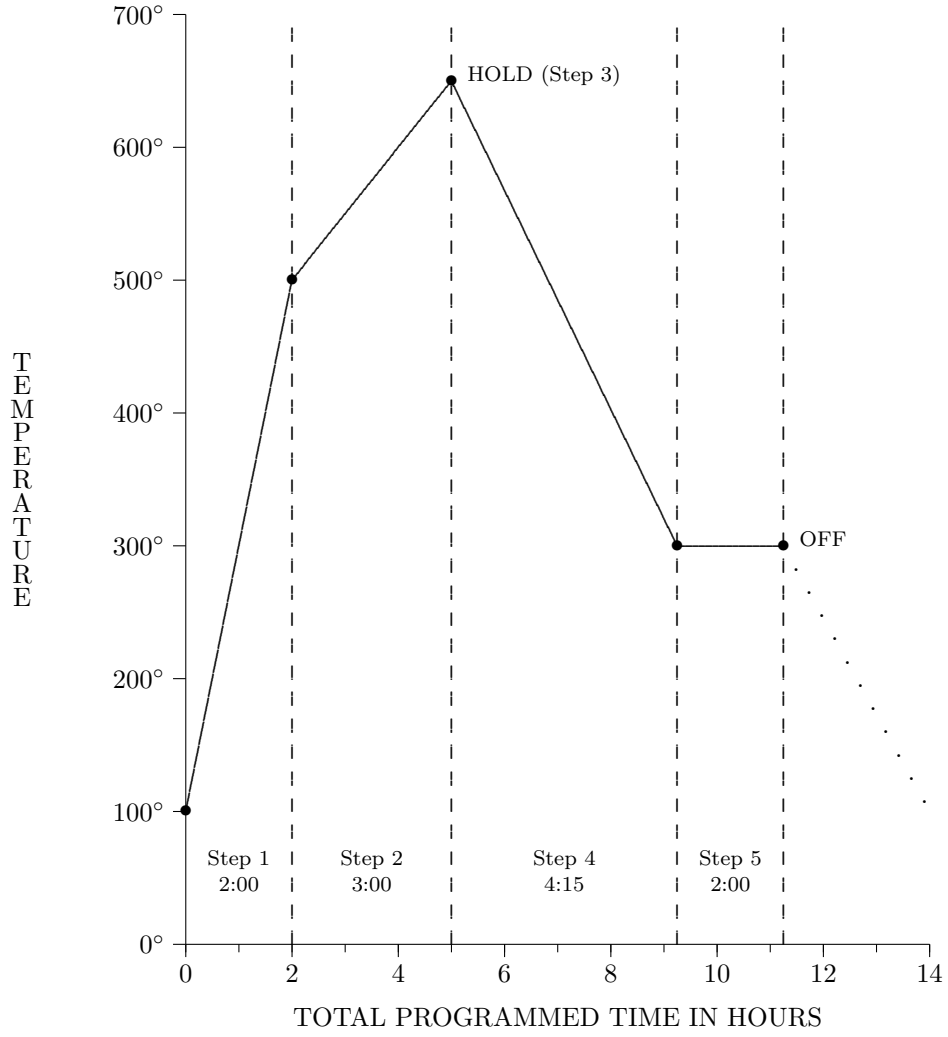

Figure 2.1: Simple Profile

As you can see, you should not use the HOLD button for a timed soak.

Now that you are familiar with the HOLD function, let's add three more steps to the previous example. Your third step is to HOLD at 650° for an indefinite amount of time. Then, cool off to 300° in 4 hours and 15 minutes. Finally, hold at 300° for 2 hours. The third step would then have "H" for time and 650° for temperature. The fourth step would have 4 hours and 15 minutes for time, and 300° for temperature. The last step would have 2 hours for time and 300° for temperature.

The graph in Figure 2.1 illustrates the profile corresponding to this simple program.

A second sample profile is shown in the graph of Figure 2.2. Figure 2.3 shows you just how easy it is to program your GB1 to follow this profile.

2.2 Entering a Profile

First, select the profile to be programmed by pressing PROFILE and the program number (from 0–9) on the keypad. The GB1 will automatically switch into PROGRAM MODE.[1]

Now the STEP display will read "1" and the TIME display will read "0". Punch in the time (in hours and minutes) on the keypad. Then press ENTER/START to enter the time. At this point, "0" will appear in the TEMPERATURE display. If you wish to change the time, or if you have made an error, press the CLEAR Button. The TEMPERATURE will become blank and the TIME will read "0". You can now enter a new time. Then, punch in a temperature, and press ENTER/START, to enter the temperature.[2]

After pushing ENTER/START, the TIME will read "0" and the TEMPERATURE will be blank. The STEP will read "2". You now are ready to enter the second point in your profile.

This process is repeated until you have entered your entire profile. Remember, you have as many as 15 steps to work with for each profile. If you enter fewer than 15 steps, your profile will terminate upon reaching the first unfilled step (zero time).

NOTE: When your profile has finished running, the GB1 will go into IDLE MODE and, to indicate that the profile has finished, the STEP display will show one more than the last step of your profile, and the TIME display will show zero time remaining. For example, when a profile with 5 steps has completed, the IDLE light goes on, the STEP display shows "6", and the TIME display shows "0". Similarly, when a profile with ten steps has completed, the IDLE light goes on, the STEP display shows "b" (which looks similar to a "6"), and the TIME display shows "0". As soon as you switch modes, this display will change to show a STEP of "1", with the TIME replaced by dashes.

2.3 Reviewing a Profile

The preferred way to review a profile while in PROGRAM MODE is to press the PROFILE key twice. This automatically sets the STEP display to Step "1". The time and temperature settings you selected for the first step now will be displayed. Pushing the ENTER/START button advances you through the succeeding steps of your program. You may back up to the previous step by pressing PROFILE followed by ENTER/START. At any time during your review, you may make changes to your program by first clearing and then reentering new times and temperatures.

[1] If your oven is idle, you may also select program mode for the current profile by pushing the MODE button.

[2] The maximum temperature for Type K thermocouples is set to 2400°F (1300°C); for Type R and Type S thermocouples, the maximum temperature is set to 3200°F (1800°C). Attempting to enter a temperature above the maximum causes E's to appear, indicating an error. If this happens, push CLEAR to proceed.

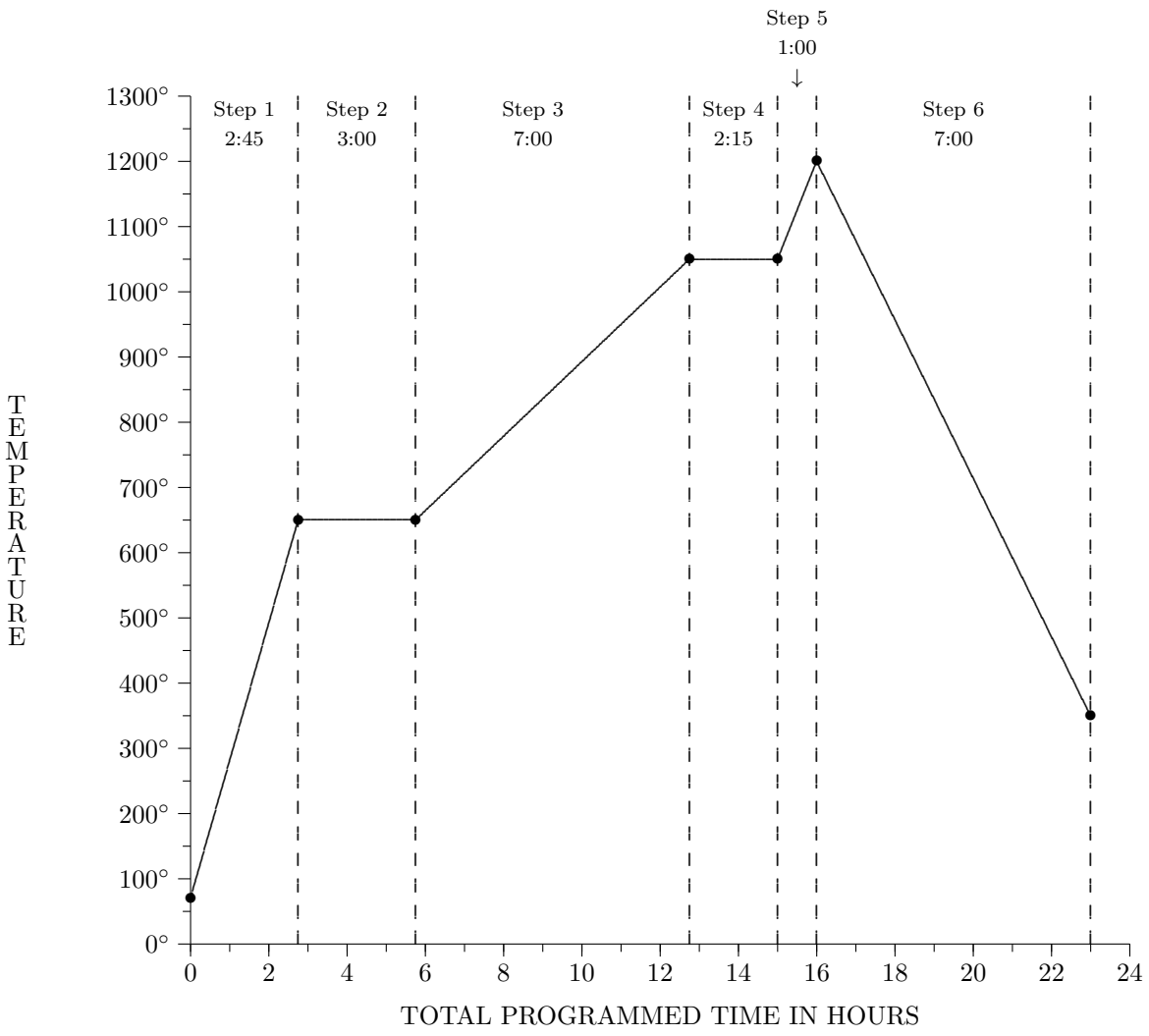

Figure 2.2: Sample Profile Graph

Press:	To:
PROFILE 5	Let the GB1 know you want to program profile #5.
MODE	Put the GB1 into PROGRAM MODE.
245 ENTER 650 ENTER	Program oven to ramp up evenly to 650°F in 2 hours and 45 minutes. This is Step #1.
300 ENTER 650 ENTER	Soak at 650°F for 3 hours. This is Step #2.
700 ENTER 1050 ENTER	Ramp up to 1050°F in 7 hours. This is Step #3.
215 ENTER 1050 ENTER	Soak at 1050°F for 2 hours and 15 minutes. This is Step #4.
100 ENTER 1200 ENTER	Ramp up to 1200°F in 1 hour. This is Step #5.
700 ENTER 350 ENTER	Ramp down to 350°F in 7 hours. This is Step #6.
	The profile is now entered.
MODE	Return to MONITOR MODE.
ENTER 5	Start profile #5 running.

Figure 2.3: Sample Profile

Recall that pressing CLEAR while in PROGRAM MODE clears the current entry. If you want to start fresh, you can press CANCEL, followed by the profile number, to erase all times and temperatures of the current profile in one fell swoop.

NOTE: To change the time setting in your program, you first must clear the temperature by pressing the CLEAR button once. Then you can clear the time by pressing the CLEAR button again. This step of your program now is ready to receive a new time and temperature. If you want to change only the temperature, just push CLEAR once and the time will remain unchanged.

You may review your program, even while it is running.[3] When you enter program mode for a running profile, the currently executing step will be displayed. You are not permitted to modify this step, because doing so would likely cause the running program to stop. This limitation applies only to the current step of the running profile. You may change other steps of this profile or any steps of non-active profiles without encountering any difficulties.

2.4 Linking

The GB1 has the ability to link one profile to another. This is not something everybody needs, and you may wish to ignore this facility. However, there are several reasons you might want to use linking. Here are a few:

- to make a profile of more than 15 steps, or
- to make a profile that lasts longer than 1500 hours, or
- to make a program that does the same thing at the same time every day (*e.g.* turning up a furnace in time for the day's work, and turning it down every evening), by linking a 24-hour-long cycle to itself.

Specifically when the GB1 is running a profile and comes to a link step, it automatically ends the current profile and begins running the linked profile. This profile in turn may be linked to a profile. Any profile may be linked to any other profile, or even to itself. Thus, the GB1 can be made to run forever.

The link command can be used only once in each profile, and it cannot be the first step in the profile (nor is there any reason you should want the first step to be a link).

A link is entered into a profile while in PROGRAM MODE by pushing the HOLD twice in succession. The "H"s in the TIME display will turn to "L"s, which designate the link feature, and a dash ("–") will appear in the TEMPERATURE display.[4] The dash is to remind you that you must now enter the number of the profile to which you wish to link. This may be any profile, including the current one.

After entering the profile number, press ENTER. (Failure to do this will result in an error. You then must clear the step by pressing CLEAR and start this step over again.)

When ENTER is pushed, the display will show all horizontal bars indicating that no further program steps may be entered, regardless of what the STEP display reads. This is because by definition link is always the last thing the profile does. Pushing ENTER at this point will have no effect.[5]

[3] GB4 and GB5 users who are used to pressing MODE twice to review a profile may become confused if a profile is running, because pressing MODE twice on a GB1 will result in reviewing the active profile, which is generally not the one being modified.

[4] Since a link cannot be the first step of a profile, pushing HOLD a second time in the first step has no effect.

[5] You can gain access to the remaining program segments by clearing the "L"s (press CLEAR).

If you push ENTER after pushing HOLD just once, the GB1 will of course assume that it is a hold. In this case, a subsequent push of HOLD will result in an error, not in the appearance of the "L"s. This is because the next thing after a hold is the holding temperature. In short, the sequence of buttons to be pressed is:

To HOLD:	Press HOLD, ENTER, (holding temperature), ENTER
To LINK:	Press HOLD, HOLD, (profile number), ENTER

You may set your linked profiles to run on a fixed length cycle, say a 24-hour cycle for daily repetition. The times may appear to stretch over a period of days. An oven set to come on at 8:00 a.m. every day may come on later in the day. Recall that there are several ways that the timer of the GB1 may have stopped:

- you may have pressed the HOLD button;
- the GB1 may have entered AUTO-HOLD if your oven was not able to follow its profile at some moment; and finally,
- power may have failed (which may well have gone unnoticed because of the GB1's memory back-up feature).

OBSCURE NOTE: If you use the linking feature to create a loop, you should understand that, if the profile returns to its beginning, the ramp to the first point depends on the temperature at the start of the step. Thus, if your temperature is hotter during the second run of the cycle, there will be a different ramp from the first time, even perhaps ramping down instead of up. For example, assume your first step is to raise the temperature to 700° in one hour, then go to 1100° in 3 hours before entering the looping feature. The second time around, your oven will start out at 1100°, and the GB1 will take it down evenly to 700° in one hour. This may or may not be what you intended.

If you want the cycle to start from some cool point, you must specifically put that into your program. For example, if you want your cycle always to ramp up to 700° from a maximum of 300°, you must enter a cooling off segment in the program before the loop. If this segment is too short for the oven to cool down within the allotted time, then AUTO-HOLD will come on, changing your total cycle time.

2.5 Coasting and Delayed Start

Whenever the temperature is set to zero, the GB1 will run its clock without turning on the oven and without engaging AUTO-HOLD. We call this *coasting*.

The main use of this is in the first step of a program for a delayed start. Use this to have your oven waiting for you at working temperature when you arrive at your studio in the morning. With the GB1, you do not have to leave the oven on all night to accomplish this, thus saving on your fuel bill and your time.

For example, assume it is 5:00 p.m. and you want your oven, which is currently at room temperature, to be at 850° by 9:00 the next morning. Estimating that it takes 40 to 50 minutes for the oven to reach 850° from a cold start, you should program the GB1 to begin heating the oven at 8:00 a.m. (15 hours from the present time). The first two steps of your profile then would be as shown in Figure 2.4.

Another interesting use of coasting is keeping an auxiliary relay on for a specified time after the oven is done heating, *e.g.*, for venting. If your GB1 has an auxiliary relay, this is described in one of the examples included with the *Auxiliary Relay User Guide*.

Step	Time	Temperature	Action
1	15:00	0	"coast" for 15 hours
2	HOLD	850	HOLD at 850°
⋮			rest of program

Figure 2.4: Delayed Start Example

2.6 Auxiliary Relay

If you ordered the auxiliary relay option, instructions for its operation and installation are included in a separate document, the *Auxiliary Relay User Guide*.

2.7 Programming Tips

Two special glass techniques, crash cooling, and its opposite, rapid heating, can be programmed by making use of the AUTO-HOLD feature. If unfamiliar with AUTO-HOLD, please read section 3.1, page 19, for an explanation.

In crash cooling, the temperature is dropped as quickly as the oven will allow to achieve special effects. To program this, set the step time to one minute and the temperature to the desired cool temperature. As soon as this step starts, the clock will stop until the cool temperature has been attained. Crash cooling can be enhanced by using a GB1 optional auxiliary relay to either automatically open the oven door or turn on a venting fan. This is described in one of the examples included with the *Auxiliary Relay User Guide*.

For rapid heating, the oven is asked to heat as quickly as possible to a specified temperature. Again, this is for various special effects. To do this, set the step time to one minute and the temperature to the desired hot temperature. As soon as this step starts, the clock will stop until the specified hot temperature has been attained.

Sometimes it is reasonable to use these two techniques in succession, to heat up a piece to a high temperature to allow some chemical or physical process to complete, and then to cool it back to an annealing temperature before the piece actually slumps. Say you wanted to raise the temperature to 1950° hold that for two minutes, and then return to 975°. You could program this with something like the profile in Figure 2.5.

Step	Time	Temperature	Action
⋮			first part of program
n	0:01	1950	rise as fast as possible to 1950°
n+1	0:02	1950	hold at 1950° for 2 minutes
n+2	0:01	975	quickly drop to 975°
⋮			rest of program

Figure 2.5: Fast Rise and Drop Example

Chapter 3

Special Features of the GB1

The GB1 is designed with several special features to enhance its ease of use and reliability. These include

- the ability to adapt a program to the capabilities of your oven using automatic holds,
- warnings of common external failures (thermocouple burn-out, contactor failures, etc.),
- protecting your programs (and consequently your work) in the event of a power failure, and
- continual internal validation of memory accuracy.

3.1 Automatic Hold

Using the profile you entered, the GB1 calculates a temperature for each minute of the cycle. It bases its decision about automatic holding on this temperature. Essentially, if your oven is not able to keep up with the temperature changes you requested, the GB1 clock will be stopped until the oven catches up.

On heating steps (ramping up), the AUTO-HOLD light will come on if the oven temperature is more than 40°F (20°C) below the calculated temperature for the current minute. On cooling or soak steps, the AUTO-HOLD light will come on whenever the oven temperature exceeds the calculated temperature for the current minute by more than 40°F (20°C).

Once the AUTO-HOLD is engaged, it keeps the clock stopped until the temperature calculated for the current minute is actually achieved.

Under normal circumstances, AUTO-HOLD is usually thought of as something that compensates for unusual demands placed on your oven's ability to follow a profile. However a creative use of AUTO-HOLD allows you to program your oven to ramp up to a given temperature as quickly as possible. Simply program the time for the step to be one minute. The GB1 then will go into AUTO-HOLD until the desired temperature is reached and then go on to the next step.

3.2 Guaranteed Temperatures

Sometimes it is very important that the final temperature of a ramp be attained before going on to the next step of the profile, and it can never hurt, so the GB1 guarantees that the oven actually

reaches the temperature specified at each point in the profile before allowing it to go on to the next step. When necessary, the clock will be stopped during the last minute of a step to allow the oven to reach this temperature. The auto-hold light will come on while the clock is stopped.

3.3 Warnings and Alarms

There are certain serious problems that could cause improper temperature readings or overheating of the oven. When this happens the alarm will be activated and an error code of the form "BAD?" or "EE??" will appear in the display to identify the problem. The GB1 will attempt to shut down the oven by turning off the contactor.[1] At this point, the only key that is active is the CLEAR key. It will clear the error message, shut off the alarm and allow the GB1 to continue. However, if the condition has not been corrected, the alarm and error message will be reactivated as soon as the condition is again detected. This can take anywhere from one second to twenty minutes, depending on the cause of the problem. Of course if the alarms have been disabled, as discussed below, then BAD1 and BAD2 are prevented from occurring for at least 45 minutes. As a special option, GB1s may be ordered with either BAD1 or BAD2 or both disabled.

The "BAD?" display is made up of unusual-looking characters: a lower-case `b`, an upper-case `A`, a lower-case `d`, and then a single digit between `1` and `7`. Thus, BAD1 looks a little like `bAd1`. We mention all this because it can be very confusing when first seen, and we hope you see warnings so seldom that you never get used to them!

These are the various error messages and their interpretations.

BAD1: The temperature does not appear to be increasing, even though the GB1 is calling for heat. This alarm latches on until the CLEAR key is pushed. Likely causes of BAD1 are

1. The thermocouple has come out of the oven.
2. There is a bad fuse in GB1 output module circuit.
3. The contactor is bad (its coil has probably burned out).
4. There is a fault in the oven itself that prevents it from heating.
5. There is an internal problem in the GB1.

BAD2: There has been a significant temperature increase even though the GB1 is not calling for heat. This alarm latches on until the CLEAR key is pushed. Likely causes of BAD2 are

1. The contactor is bad (it has become stuck or shorted).
2. There is a short circuit in the wiring between the GB1 and the contactor.
3. There is an internal problem in the GB1.

BAD3: There is a problem with the thermocouple. This alarm remains active only so long as the problem is detected; once the problem disappears, the alarm goes off by itself. Likely causes of BAD3 are

1. The thermocouple itself is broken ("open" or burned out).
2. There is no thermocouple attached to the GB1.
3. A wire connecting the thermocouple to the GB1 has become loose.

[1] The attempt will fail if the contactor is locked on and no longer under the control of the GB1.

4. There is an internal problem in the GB1.
5. Leakage of electrical current from heating elements to thermocouple[2].

It is normal for thermocouples to burn out after a certain amount of use. When this happens, the BAD3 message will appear. To be sure that the problem is indeed external to the GB1, try the following: connect a plain piece of wire from the red to the yellow terminals where the thermocouple attaches. Don't forget to turn off all power, including the power to the contactor, before opening the GB1. When you turn power back on, the GB1 should display ambient room temperature when in MONITOR MODE. If it does, the GB1 is functioning correctly, and you should replace your old thermocouple.

BAD8: The thermocouple is shorted to ground. This alarm remains active only so long as the problem is detected; once the problem disappears, the alarm goes off by itself.

BAD9: The thermocouple is shorted to power. This alarm remains active only so long as the problem is detected; once the problem disappears, the alarm goes off by itself.

EE2: There has been a memory failure. See section 3.8, page 23.

EE??: Any EE error other than EE2 is caused by an internal GB1 error. If this happens repeatedly, note the error number and contact Digitry.

BAD1 and BAD2 alarms "latch on" and will reset only when CLEAR is pressed. The other alarms are self-clearing, so if they are caused by an intermittent condition and if you have attached an external alarm to the GB1 (see section 4.4, page 29), then this alarm will sound intermittently also.

3.4 Disabling Alarms

BAD1 and BAD2 detect temperature changes not initiated by the GB1. Under normal circumstances these work as expected. However whenever an external event causes abrupt temperature changes, these alarms may falsely trigger. This could happen when you place a large, hot casting into the oven; it might raise the temperature without the GB1's calling for heat, thus triggering a BAD2. Similarly, opening the oven door to place a piece into the kiln or keeping it open to "crash cool" a piece could trigger a BAD1. Under these circumstances, it is desirable to be able to disable the alarms before they trigger. Assuming the GB1 is in MONITOR MODE and not already displaying a BAD message, you can do this by pressing the CLEAR key. This disables BAD1 and BAD2 alarms for 45 minutes. Each time CLEAR is pushed, the 45 minute delay begins afresh; pushing it twice does not give 90 minutes — just 45 minutes from the second push. The key is acknowledged by momentarily displaying a horizontal bar "– – – –" in both the TIME and TEMPERATURE displays. In general, there is no way to cancel this delay but the passage of time. However, starting a profile or skipping a step nullifies any time left in such a 45 minute delay.

[2]This tends to happen mainly at very high temperatures, when refractory materials become electrical conductors instead of insulators, and thus this appears to be an intermittent problem. Typically this is an installation problem and may sometimes be cured by changing the placement of the thermocouple or by using a better thermocouple.

3.5 Behavior During Power Failures

Special components and circuitry are used within the GB1 to preserve its memory during power failures. The GB1 will remember:

- whether your oven was running or idle when the power failed,
- the profile step and time when the outage occurred, and
- the last temperature reading at the time of the power failure.

When the GB1 detects low power, it indicates this by displaying "LO P–" in the TIME display. This may be the result of a "brown out" or the prelude to total loss of power. The actual power loss may be so short that your only indication is this "LO P–" display.[3] So that it may be seen, the "LO P–" display stays on for a couple of seconds even if full power returns more quickly.

During the power failure, the face of the GB1 will look blank.

When power is restored, "8"s will appear in the TEMPERATURE display while the GB1 takes new, reliable temperature readings. Concurrently, the PROFILE display counts down from 5 to 1. The GB1 then evaluates the temperature loss of your oven from the time the power failed to the time it was restored. If the actual temperature loss is less than 200°F (or 100°C for Celsius models), the profile will continue as if the power failure had not occurred. Since the vast majority of power failures are quite short (under one minute), the temperature drop will be insignificant and the oven thus will continue running according to your original profile.

If your oven cools more than 200°F during a power failure, the temperature of the oven when power is restored will be maintained. The TIME and TEMPERATURE displays will read "COld". If you have connected an alarm, it will sound. This procedure should protect your oven and its contents from reheating rapidly without your knowledge. When you check the oven and notice this condition, you then have the opportunity to decide the most appropriate course of action from this point (as described in the following section).

ANOTHER OBSCURE NOTE: If the oven was ramping up or holding when the power failed, AUTO-HOLD will go into effect until the oven reaches the programmed temperature. If it was ramping down, AUTO-HOLD will not come on, because the temperature is lower than required, and the GB1 assumes that the temperature is thus simply ahead of schedule. See section 3.1, page 19, for more details.

3.6 'COld' Readings

As noted above, if a power failure has lasted long enough that your oven has cooled more than 200°F (100°C) during the outage, its TIME and TEMPERATURE displays will read "COld". If you have connected an alarm, it will sound. The current temperature will be maintained.

When this occurs, push the CLEAR button to clear the "COld" display. The last step and time reading before the power failure will be displayed along with the CURRENT temperature, and the profile will continue running. Since the oven lost more than 200°F during the power failure, the oven will begin heating. If you wish, you can use the adjustable setpoint feature of the keypad hold (see section 1.5, page 8) manually to set a suitable temperature.

If you want to cancel your profile and restart it, push CANCEL and the profile number. The GB1 will then be in IDLE.

[3] It is important to realize that many power failures are extremely short, so short that you may not even notice them. As a consequence, from time-to-time your GB1 may appear to begin the count down cycle spontaneously. This is invariably a result of power difficulties of some sort.

3.7 Voltage Protection

Considerable design effort has been devoted to protecting your GB1 against line voltage transients and transients at the thermocouple connections. At the power input, transient spike protection is wired internally into the GB1. Any abnormally high voltage spikes are automatically shorted to ground by the internal solid-state circuitry.

In spite of all this protection, contact between a thermocouple and a live heating element is likely to damage the GB1. The GB1 is not guaranteed against damage of this type. The thermocouple should be fastened securely within the oven to prevent contact with the heating elements.

Under no circumstances should you adjust the position of the thermocouple when the oven is heating. Not only do you risk damage to your equipment, you also risk a **DANGEROUS ELECTRICAL SHOCK**. Remember, the heating elements typically contain voltages as high as 240 volts, depending on exactly where they are touched. Thermocouples are made of metal. Metal conducts electricity. Even if your elements and thermocouples are encased in porcelain, care still must be used. Porcelain and other refractory materials become conductive at high temperatures and consequently do not give as much protection as you might assume.

3.8 Memory Failure

Your GB1 continually checks its internal memory for accuracy. In case of a memory failure, the green and red MODE lights alternately will light about every one-half second and "P"s (for "Problem") will flash across the TIME and TEMPERATURE displays. If you have hooked an alarm to the alarm relay, it will sound.

The flashing "P"s indicate a corruption of the GB1's memory. This may be a temporary condition, one that may never recur.

In the event of a memory failure, the GB1 is designed to protect your work and ovens by running the following sequence. First, it will turn off your oven for about one minute to allow the temperature readings to stabilize. Then, it will read the current temperature and hold at that temperature until you reprogram the GB1.

When the GB1 signals a memory failure, push any key to reset it, and it will stop flashing. The GB1 will then check to see if the profiles have been corrupted. If they have been, then all profiles will be cleared, your oven will be set to IDLE, and the GB1 will display PROFILE #0. If you do not reprogram the GB1, your oven will begin to cool down.

On the other hand, if the profiles have not been corrupted, then when you push a key the GB1 will go on as though nothing had happened. However, the flashing indicates that something was corrupted, so you should be sure to check the profile number, step number, time, *etc.* It may be necessary to restart the profile and manually skip steps to an appropriate step to resume work (see page 10). In some cases, you may have to program a special rescue profile to recover.

Fortunately, memory failure is quite unusual. It can usually be traced to one of two causes:

- A voltage transient so fast and so powerful that it swamps the GB1's protective circuitry and modifies profile memory. Digitry's memory assurance scheme is so sensitive that it will detect the alteration of even a single digit.
- Power failure while you are entering a profile. In this case, the memory assurance scheme may detect inconsistent information.

In rare cases, electronic failure of the memory will appear as a memory failure, one that you cannot clear using the procedure above. In this case, you will have to return your GB1 for repair.

Chapter 4

Installation

Safety Considerations

Before installing your GB1, please consider the following important safety issues. Your Digitry temperature controller is a device to facilitate the processes involved in ceramic and glass production. Any electronic device can fail for a myriad of reasons — both obvious and obscure. One should never rely on any temperature controller to ensure fire safety. Any kiln or annealing oven should be installed so that there is no fire danger, even if the kiln is on full all of the time (although this might cause damage to the kiln itself). Be sure there is adequate clearance from all walls and flammable materials. In particular, floors under kilns should be fireproof. Additionally, your installation should conform to all applicable fire and building codes.

The electrical circuits powering your kiln involve very high currents and dangerous voltages. Apart from dangers posed by potentially lethal electric shock, there is also a danger of fire arising from inadequate or improper wiring. Accordingly, it is strongly advised that all electrical work involving the powering of your kiln and installation of power relays (mercury or solid-state) be done by a qualified electrician, in compliance with all applicable electrical codes.

4.1 Orientation

There are two required aspects and one optional aspect to the installation of your GB1:

- connecting the thermocouple that measures the temperature of the oven
- connecting the relay or solenoid that controls the heating of the oven, and
- [optional] connecting an alarm to the GB1.

The Digitry GB1 is available in several variants, each designed to give the best match for its intended use. Some installation details vary with each of them.

Thermocouple Types:
The standard GB1 is designed for use with a Type K thermocouple. As an option for use with high temperatures, the GB1 can be ordered for use with a Type R or Type S platinum thermocouple.

Output Types:
The standard GB1 has an On/Off output optimized for AC control of magnetically activated devices such as mercury contactors, mechanical relays ("contactors"), or gas solenoid valves. For

these GB1s, the output acts as a switch only and requires an appropriate external power source for the activated device.

As an alternative, the GB1 may be ordered with a low-voltage DC output suitable for controlling solid state relays, small DC mechanical relays, and some DC controlled mercury relays. These GB1s do provide a small amount of power to activate these devices directly. These systems are generally used for proportional control but may be ordered for On/Off use. Certain complete GB1 systems have a plug box controlled by a 12 volt DC signal.

An optional, external module can be added to a GB1 configured for PID control to convert it to a 4–20 milliamp current-loop output.

Figure 4.1 shows the interior of a GB1 and indicates where wires are to be attached. Consult it as you read the following instructions before installing your GB1. As you will see, the entire procedure is relatively easy.

One more small issue that needs to be straightened out before we get into the details of installing the GB1: voltage designations. Alternating Current ("AC") voltage designations are a bit fuzzy. Some people refer to the standard voltage in the USA as 110 Volts, while other people refer to this same voltage as 120 Volts. A similar issue occurs with 220 Volts and 240 Volts, but it gets more confusing in this range when three-phase circuits are considered, and the voltage is 208 Volts. For the purposes of this manual, we will use 120 Volts to mean any voltage from 100 Volts (used in some countries, e.g., Japan) through 130 Volts, and 220 Volts for any voltage from 200 Volts to 240 Volts. These voltages are dangerous enough. Please be careful! If you're dealing with anything above these, we assume you're a trained electrician and don't need our simple explanations.

One final thought:

WARNING: SERIOUS AND EXPENSIVE DAMAGE MAY OCCUR TO YOUR GB1 IF YOU APPLY 120 VOLTS, OR EVEN 12 VOLTS, TO EITHER THE THERMOCOUPLE INPUT TERMINALS OR TO THE (OPTIONAL) 12 VOLT DC OUTPUT TERMINALS. DO NOT BE CARELESS WHEN HOOKING UP THE RELAY POWER. YOUR UNIT IS NOT GUARANTEED AGAINST DAMAGE DUE TO INCORRECT WIRING.

4.2 Opening the GB1

It is necessary to remove the faceplate of the GB1 to connect the thermocouple and relays. It is a good idea to do this work at a table or desk.

Before opening the GB1, always be sure that all power is off, including especially power to the contactor and the optional alarm relay.

Once you have checked that power is off, remove the six screws on the faceplate. If you now tilt the GB1, the faceplate and its attached circuit board will fall away from the box. Be ready to catch the faceplate so that it doesn't get damaged and no strain is put on the cables that connect it to the main circuit board in the bottom of the case. These cables are long enough that you can lay the faceplate on the table out of your way without disconnecting them. Do be careful, though, not to yank on these cables.

Pass the wires you are connecting through the rubber grommets before attaching them to the terminals. Wires being lead into any enclosure through an opening should have a *strain relief* to prevent a tug on the wires from disconnecting them. This is particularly important for wires that carry power like the relay wires.

You can form a strain relief using plastic tie wraps. Wrap a tie wrap around the wires a couple

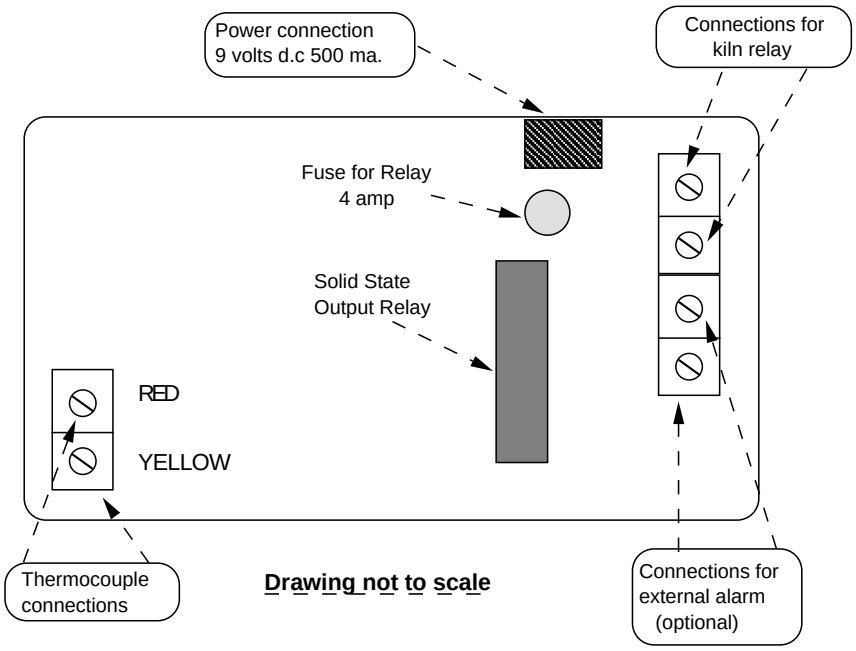

Figure 4.1: Interior of GB1

of times and pull it as tight as possible with pliers. Alternatively, if your relay wires are flexible enough, you can tie a knot in them before connecting them to the terminals. Position the strain relief so that there is no tension in the wires between the strain relief and the terminal strip.

After all connections are made according to the directions in the following sections, replace the cover, making sure the cables between the circuit boards lie fair and are not forced over towards the terminal strip. Put in the six screws and hand tighten moderately. Do not over-tighten these: you may need to remove the cover again some day.

4.3 Thermocouples

There are various types of thermocouples in common use. For temperatures typical of most glass and ceramic techniques, the Type K (chromel-alumel) thermocouple is almost universally used. For the higher temperatures encountered in certain processes such as crystalline glazing of ceramics and for melting glass in furnaces, a platinum thermocouple is generally used.

Digitry's standard GB1 is designed for use with Type K thermocouples. Because of differences in calibration, a GB1 that has been designed for use with Type R or Type S (platinum-rhodium) thermocouples should not be used with a Type K thermocouple and vice-versa. The type of thermocouple must be matched with the type of GB1. A mismatch between the thermocouple and the GB1 will result in erroneous temperature readings but will not damage the GB1. Although Type R and Type S thermocouples are similar, and indeed use the same extension wire and color coding, using one for the other will cause errors of as much as 200° Fahrenheit.

The thermocouple installation is as follows:

We assume you have removed the faceplate of the GB1 as described above. The first step is to attach the thermocouple to the GB1. Unless your unit was equipped with a thermocouple at the factory, it was shipped with a jumper wire across these two terminals. This wire must be removed before proceeding.

A thermocouple is a polarized device: it has a positive and a negative wire, and it is important to attach them correctly. In the USA and Canada, the leads to the thermocouple are color coded as follows

Thermocouple Type	Positive lead	Negative lead
K	yellow	red
R	black	red
S	black	red

Because Type K thermocouples are by far the most commonly used with a GB1, the terminals are labelled "red" for the negative wire and "yellow" for the positive wire[1]. For thermocouples in other countries, make the connections accordingly: negative to "red" and positive to "yellow".

If you hook up the thermocouple with the leads interchanged, no damage will occur, but the temperature readings will be wrong. As the temperature increases, the readings will decrease until they reach 32 ° Fahrenheit (0 ° Celsius), the lowest possible reading.

If there is any doubt about which wire is positive and which is negative, try one way. If it is wrong you will soon see the temperature going backwards, as described just above, and will thus know to reverse the leads.

[1]This may be confusing to those of us who associate red with positive and black with negative. However, we must accept this inscrutable convention of the thermocouple world.

If the thermocouple lead wires are not long enough to reach from your oven to the GB1, you must use extension leads. These leads should be made of thermocouple extension wire matched to the type of thermocouple, and they should be relatively short. Ordinary copper wire can be used instead of extension wire, but this generally introduces a small error into the temperature readings. This error is known as the cold-junction error and is an offset error that depends only on the ambient room temperature.[2]

The suggested length of the thermocouple leads or extension is up to approximately eight feet [2.4 meters], but there is no hard-and-fast rule about this. Depending on your situation, you might be able to use leads considerably longer than this, but you will have to make a few experiments to find out. If you observe unreliable or erratic temperature readings, especially when heavy electrical equipment or motors turn on and off, you should be suspicious of long thermocouple leads[3]. Shielding, e.g., grounded metal conduit, or a ferrite filter may improve the situation.

Position the thermocouple somewhere within the oven where it is likely to measure even temperatures. For example, if placed too near a heating element, it may read temperatures that are higher than the ambient temperature.

There is no way that the GB1 can distinguish between a thermocouple that has burned out and the situation where no thermocouple is attached. In either case, it will activate a BAD3 message and the alarm relay. When a functioning thermocouple is reconnected, normal operation will resume with no further action required.

4.4 Connecting a Control Relay

The GB1 can be ordered with one of two different kinds of output. The most common GB1s have "On/Off" outputs that control AC devices, where the power is provided externally and the GB1 acts like a smart switch, turning the oven on or off as required.

The other alternative, which is becoming more common, is direct DC output, where the GB1 provides a DC voltage capable of controlling small mechanical devices and solid state relays.

Standard GB1 — On/Off Control for AC

The standard control relay output of the GB1 is an AC solid-state relay capable of handling up to 1 Amp, 20–260 volts AC[4]. This voltage is not supplied by the GB1 but must be provided as part of the installation. Whether 24, 120, or 240 Volts, *etc.*, is used depends on the requirements of the relay or solenoid. The minimum load necessary to actuate the output relay is about 10 milliamps. Note that a typical two-pole mercury contactor draws around 100–300 milliamps, which is very comfortably within the range of the GB1's specifications.

The GB1 control relay is optimized for reliable control of contactors, relays, and solenoids; it completely isolates the external voltage from the rest of the GB1 circuitry. Because the control voltage is AC, there is **no difference** between the two top terminals — they are symmetric. You should not think of one of them as "in" and the other as "out". Ignore the + and − markings on the PC board; these are for optional solid state relay outputs only and do not apply to AC control.

[2] An offset error does not increase as the measured temperature gets higher.

[3] A thermocouple generates extremely small voltages, on the order of a few thousandths of a volt, reaching a maximum of about 50 millivolts. The longer the wires, the more they act like antennas, picking up electrical noise that makes it harder to get stable, correct temperature readings.

[4] Other options are available; see the Output specifications in section 6.1, page 43.

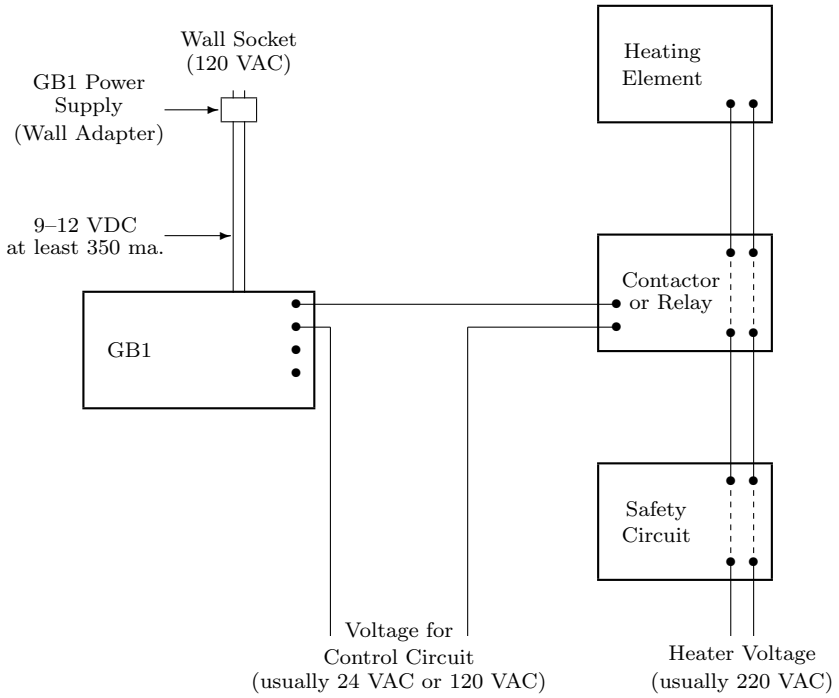

Figure 4.2: Typical Installation, Standard GB1 — Schematic

THIS IS A CONTROL CIRCUIT ONLY: NO MAIN HEATING ELEMENT POWER SHOULD BE RUN THROUGH THIS INTERNAL RELAY!

It should be noted that in order to provide the utmost flexibility, the main control terminals do not supply any power or voltage. This means you can use, say, a 24 Volt, a 36 Volt, a 120 Volt, or a 240 Volt relay without having to make any changes whatsoever to the GB1. We repeat:

This is a passive switch and does not supply any power.
This is a passive switch and does not supply any power.
This is a passive switch and does not supply any power.

We cannot stress this too strongly: it is the cause of much confusion during installation.

If you are using contactors with less than 120 Volt coils, you will probably need a step-down transformer to get the lower voltage. In new installations, a low voltage 24 or 36 Volt control system may be preferable to a 120 Volt system: such a system is safer and easier to install according to various electrical codes. For control of gas, a low voltage solenoid is frequently specified.

As shown in figure 4.2, the control voltage should be connected in series between the GB1 terminal and the appropriate contactor or solenoid. It is important to realize that the control voltage is not necessarily the same as that used to heat the oven. A 24 volt relay may still control a 240 volt oven.

It is essential to have a switch or circuit breaker in the circuit of the main heating element of the oven. This allows the independent shut down of the oven in case of a malfunction or stuck

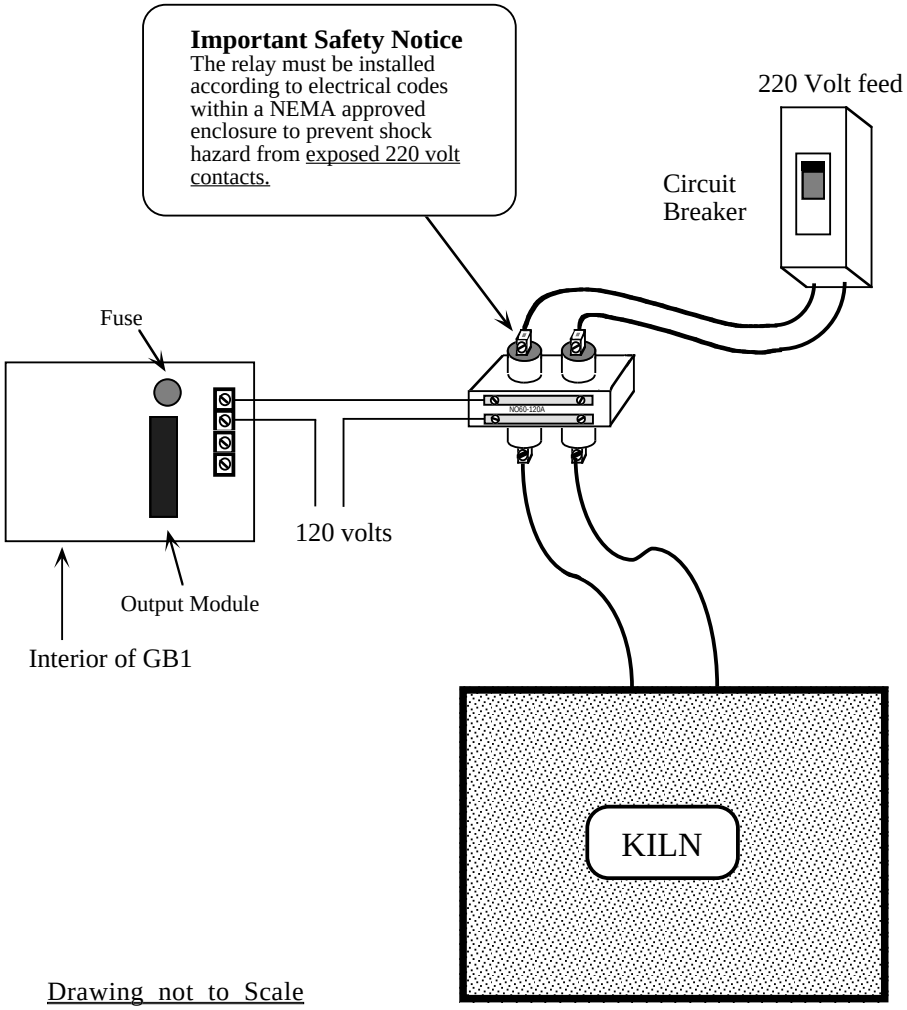

Figure 4.3: Typical Installation, Standard GB1 — Pictorial

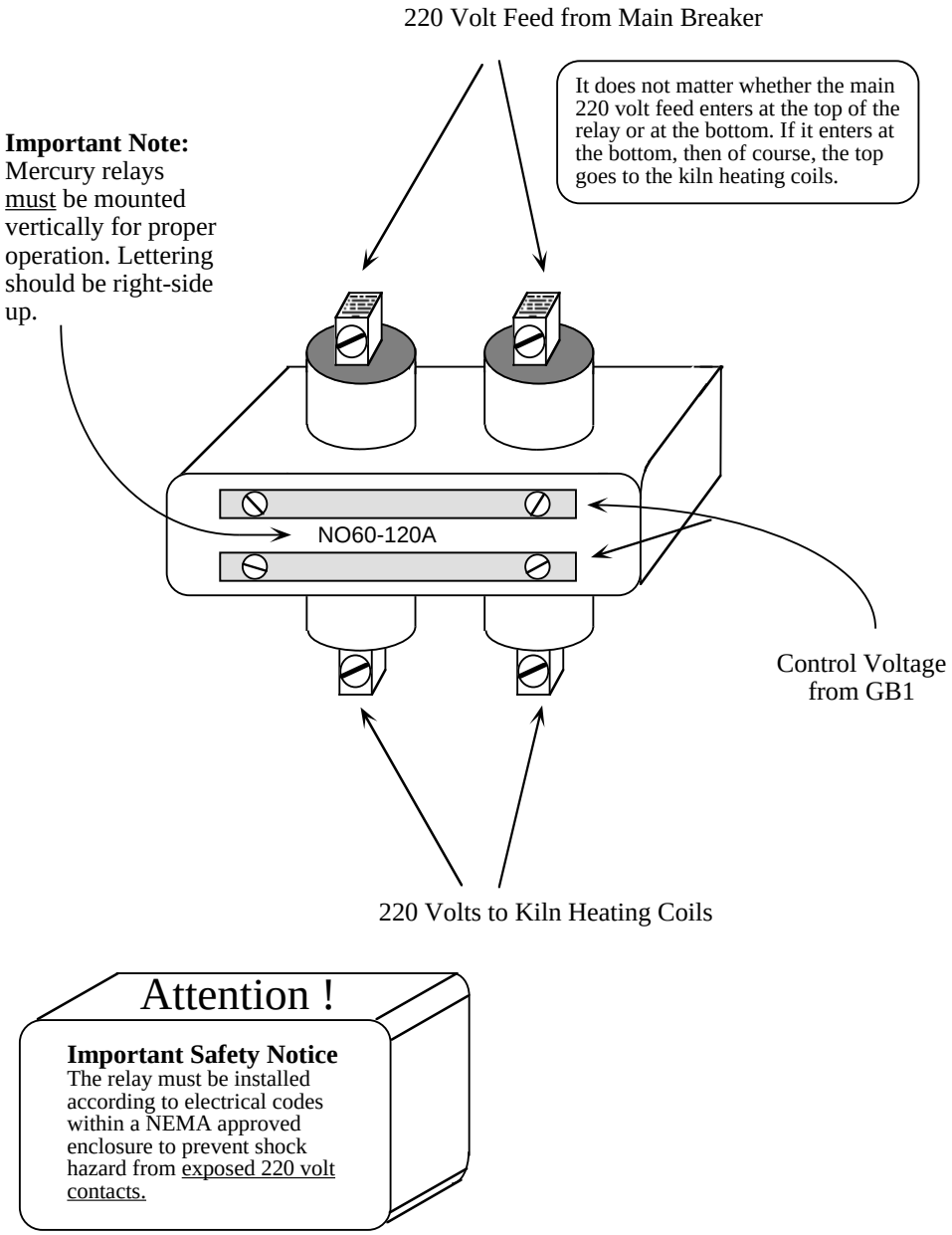

Figure 4.4: Typical Mercury Relay

contactor. The GB1 output channel is fused internally. To check or replace this fuse, you must remove the front cover of the GB1.

Figure 4.4 shows what a typical mercury displacement contactor might look like. Figure 4.2 gives a schematic view of a typical installation of a GB1 controlling a contactor. The version shown in figure 4.3 gives a more pictorial view of the same thing. Note that there are three wires used to form the circuit involving the GB1 and the contactor:

- from the control voltage source to the GB1,
- from the GB1 to the contactor, and
- from the contactor to the control voltage source.

The GB1 power supply is shown in figure 4.2 for reference only; it does not provide any power for controlling the contactor, only for supplying the GB1.

The most frequent problem in installing a GB1 is to assume that it provides power and to install it as shown in Figure 4.5. Note that in this incorrect installation there is no source of power for the control circuit, and thus there is nothing that can activate the contactor. This installation will not work.

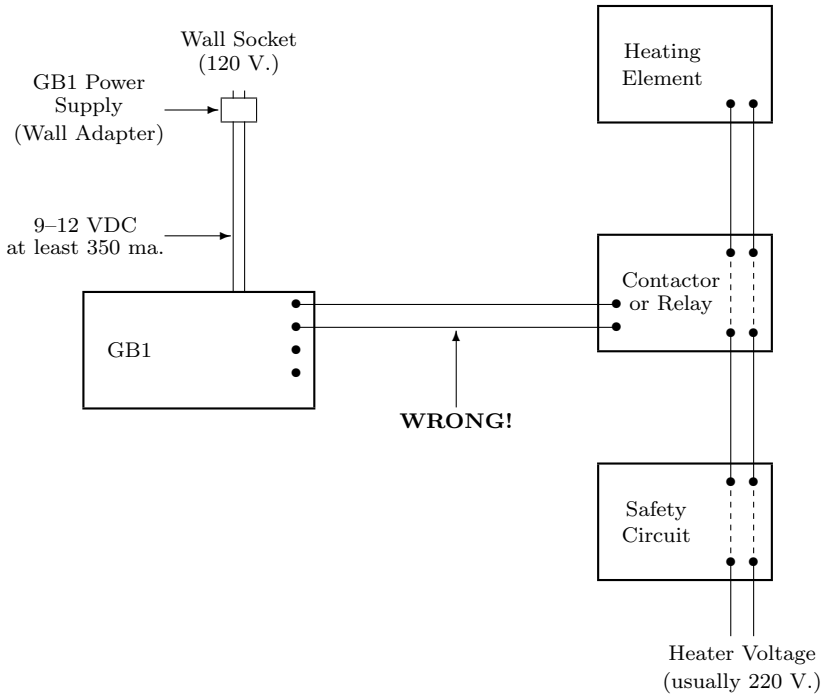

Figure 4.5: **Incorrect** Installation for Standard GB1

WARNING: TO PREVENT POSSIBLE DANGEROUS ELECTRIC SHOCK TO YOURSELF AND DAMAGE TO YOUR GB1, REMOVE THE COVER ONLY

WHEN THE AC POWER IS TOTALLY DISCONNECTED FROM BOTH THE GB1 AND ALL CONTROL CIRCUITS.

Note that even though a fuse is provided in the main control relay, it does not guarantee total protection for the solid-state output module inside the GB1. In the event of excess current's being drawn (from improper wiring, for example), this solid-state device may be damaged long before any fuse of a reasonable size could blow. Therefore, when installing your GB1, scrupulously review your wiring. Be certain there is no direct short across the output terminals before applying power to your relay control circuit, as this quite possibly may blow out the output module. Also, be certain that you have connected the relay wires to the correct terminal strips (on the right of the GB1, looking from the top).

When you attach the wires, remember, the top two terminals on the upper right hand side are for connection of the contactor control, and the bottom two are for connection of the optional external alarm. Don't forget the strain reliefs.

One final remark for those of you using mercury relays: these must be mounted vertically. They depend on gravity to control the position of a pool of mercury and if not properly oriented they will not work; they will either stay on or stay off continually. A typical mercury relay is shown in figure 4.4.

DC Output

DC output connections differ from the standard GB1 connections in three very important ways.

1. External power is neither required nor allowed. In particular, connecting 110–120 volt external power will instantly blow the fuse in the output circuit, and even then may cause further damage to the GB1.

2. The connections are polarized. In some cases, it matters which wire goes where. The top terminal is positive and the second one is negative. If the polarities are reversed no damage will result, but solid state power relays will not activate.

3. If a mechanical relay is to be used, the "wall adapter" power supply should be rated at 12VDC at 1 Amp or more.

There are two schemes for DC Output: proportional control and DC On/Off control.

Proportional Control

With "pulse averaging" proportional control, also known as "pulse width modulation" or "PWM", the oven is controlled by a solid-state power relay, which is pulsed on and off very rapidly. To the oven it seems to be partially on all the time. The percentage of "on" is determined by the number of pulses in a given second.

See figures 4.6 and 4.7 for installation diagrams.

A pulse averaging GB1 differs from that of the standard On/Off version, since it is controlling a solid-state relay and not a magnetic device such as a contactor. In this case the GB1 provides about 9 volts DC drive for the solid-state relay. The relays used in this application should be of the type that have a DC input, usually 3–15 or 3–60 volts, and as with all solid-state power relays, they must be provided with adequate heat-sinks or they will quickly fail. If in doubt about this, check with the supplier of the solid-state relay to be sure that it is properly installed.

Important safety consideration: Recall that when using a mechanical or mercury relay to control a 220 volt line, it is normal practice to use a two-pole relay so that both sides of the line

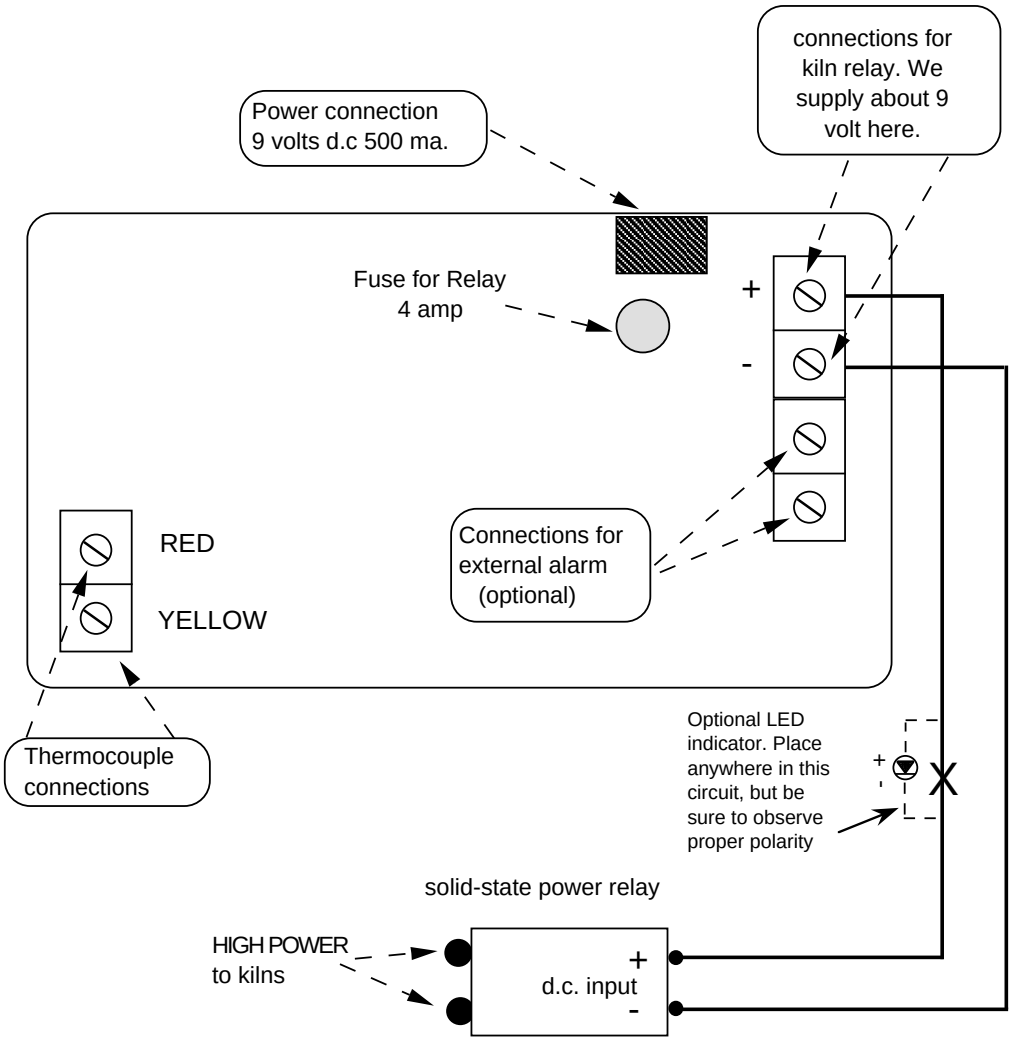

Drawing not to scale

Figure 4.6: Solid-State Power Relay Connection

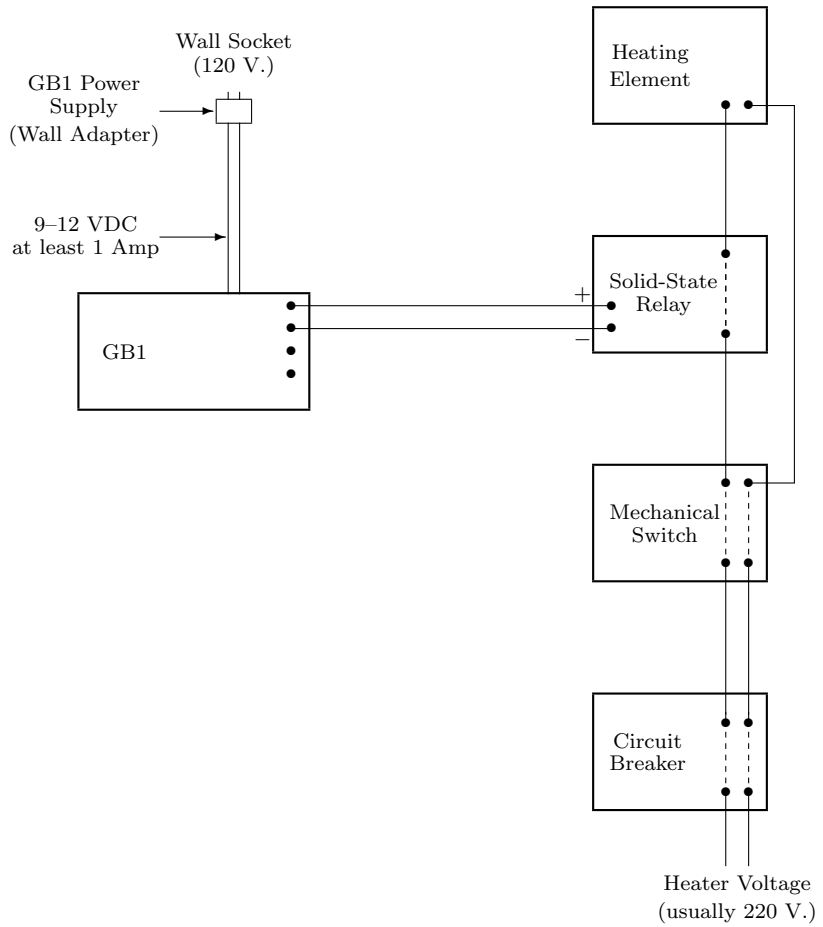

Figure 4.7: Recommended Solid-State Relay Installation

are switched. Therefore, when the relays are not actuated, there is no possibility of current flowing through the heating elements, so they are electrically safe to touch — though they may still be quite hot. With solid-state relays, this is **absolutely not true**. Solid-state relays are not open circuits when off; they are just high impedance circuits. Therefore, some current, possibly enough to shock a person, still flows. The only sure way to prevent shock is to mechanically disconnect the heating elements from the power source. One way to do this is to open the circuit breakers for the heating element circuit. If the breaker panel is not near the kiln, you can install a disconnect switch near the kiln.

WARNING: ALWAYS COMPLETELY DISCONNECT THE HEATING ELEMENTS FROM ELECTRICAL POWER BEFORE TOUCHING THEM.
And, of course, be sure they are cool.

DC On/Off Control

It is also possible to use solid-state power relays without proportional control, though this is seldom done. This scheme uses the same electrical output connections as the Proportional Control version described above, and the same electrical connections and safety considerations apply. In particular, the wiring is polarized and is output only. The only difference is that when the output is on, it is steady and not pulsing rapidly.

It is also possible to use a 12 Volt DC mechanical relay for On/Off control. For example, this is used in certain complete GB1 systems that have plug boxes. As with the solid-state relays, this scheme uses he same wiring wiring as the Proportional Control version, but the output is On/Off and provides up to 700 ma. at 12VDC to control small relays or a 12VDC mercury relay. Note that because a small two-pole 12VDC mercury relay may draw about 600 ma. only one of these may be connected to the output. If using a three-pole relay or even a two-pole, 100 Amp relay, be sure to check its current requirements, because some of these draw more than 700 ma.[5]

4–20 Milliamp Current Loop

Some applications require a 4–20 milliamp "current loop" for control. These include gas furnaces using a Honeywell "Modutrol"[6] motor and some phase-angle SCRs. These devices are proportional, where the proportion is encoded as the amount of current flowing in a circuit. The amount of current in the circuit is determined or "conveyed" by the GB1. It is interpreted or "read" by the Modutrol motor, whose shaft angle adjusts itself according to the current.

A special external "current loop" module, together with a GB1 configured for PID output, must be used in such an application. Since these installations are frequently used in harsh industrial environments, this external module uses an optically isolated output circuit to protect the GB1 from electrical spikes and transients.

Installation instructions are supplied with the current loop module.

4.5 Connecting an Alarm

If you choose to, you may connect an external alarm to the two terminals below the two you used to connect the oven relay. When the GB1 detects an abnormal situation, it not only indicates this with a "BAD" message in the display, but it can also activate an external alarm if you attach one.

[5] Contact Digitry in such cases for a GB1 with customized output.
[6] Modutrol is a brand name of Honeywell Corp.

It does this by closing an internal alarm relay, which is a mechanical reed relay with a maximum capacity of two amps. Since the relay is not solid-state, there is no restriction concerning AC or DC current. For utmost flexibility, no power is supplied by these terminals

The use of an alarm is optional. It may be connected to a light, buzzer, bell, horn, siren, telephone dialer, *etc.* The details of installation depend on the nature of device used for an alarm. The primary consideration — the most important thing that the installer must understand — is whether or not the connection to the alarm must supply power. For example, a phone dialer typically provides its own power and simply requires a switch be connected. Thus two wires from the dialer to the relay contacts on the GB1 suffice. This is shown in figure 4.8.

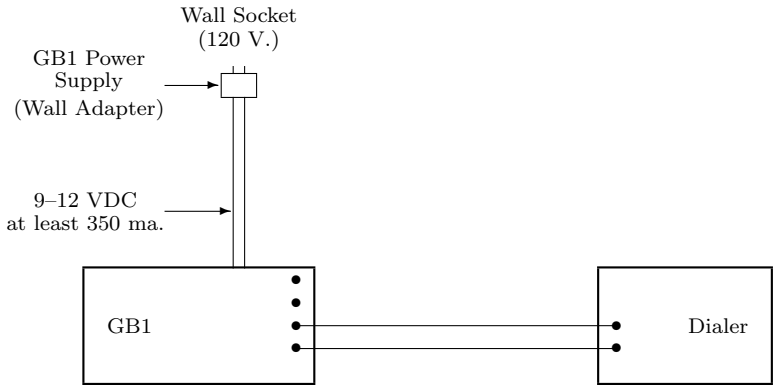

Figure 4.8: Typical Phone Dialer Installation

On the other hand, a bell or a siren or a horn typically requires power, and its installation will closely resemble the installation of the control relay of the standard GB1. Explicit directions are given below. The voltage required by the alarm device is determined the device itself. The GB1 can control any voltage up to 120 volts.

If a current of more than two Amps is necessary to drive your alarm, you must use an intermediate relay of appropriate size. Note that a 100 Watt light bulb draws in excess of two amps when it is first turned on, so it must be controlled through an intermediate relay, even though its eventual current is only about one Amp. If your alarm draws too much current, it will probably weld the contacts of the reed relay together, and you alarm will not ever shut off! In this case the relay will need to be replaced.

The alarm relay is not fused internally, since it is too likely that a bad fuse will prevent an important alarm from sounding. If you want a fuse, include it in the external wiring to the alarm. The GB1 itself imposes no limit on how far away the alarm can be. This will be determined by the alarm device itself and how it is installed.

The circuit and the installation procedure for a bell-like alarm are virtually identical to those discussed in the section for the standard GB1 control relay. Three wires are required. One wire goes from one side of the power source for the alarm to the terminal on the GB1. The second wire goes from the other terminal on the GB1 to one connector on the alarm. The third wire goes from the other connector on the alarm to the other side of the power source. This is shown

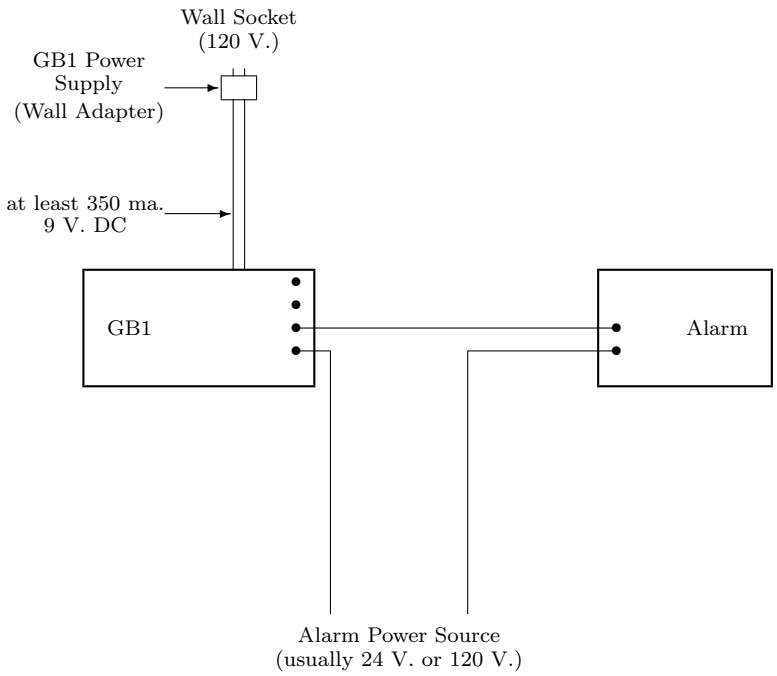

Figure 4.9: Typical Alarm Installation

schematically in figure 4.9. Please observe the same cautions while installing the alarm as you did while installing the control relay.

To recapitulate: The alarm may use either AC or DC power, up to 120 volts. The maximum current that the alarm may draw is 2 amps. As is the case with the control relay, the GB1 alarm connection is to a passive switch. The GB1 does not supply any power for the alarm.

4.6 Powering Your GB1

The "wall adapter" power module of the GB1 should be plugged into a 110–120 volt AC circuit ("wall adapter" power modules for 220 volt, 50 cycle available on special order). It is recommended that this circuit be used ONLY for the GB1. If no independent circuit is available, do not operate motors or large equipment on this same circuit.

WARNING: TO PREVENT POSSIBLE DANGEROUS ELECTRIC SHOCK TO YOURSELF AND DAMAGE TO YOUR GB1, REMOVE THE COVER ONLY WHEN THE POWER IS TOTALLY DISCONNECTED FROM BOTH THE GB1 AND ALL CONTROL CIRCUITS.

4.7 DOs and DON'Ts

Like any tool you work with, the GB1 abides by a prescribed set of operating principles. Follow precisely the installation instructions detailed in this chapter. And, keep in mind the following "do"s and "don't"s when installing your GB1.

- Do not run power for heating elements through GB1 relays.
- Do remember that the standard GB1 controls your contactor or solenoid by a passive relay, which acts simply like a switch; it does not itself supply power.
- Do not run thermocouple extension wires to the GB1 in the same conduit or in close proximity to wires connected to heavy equipment or to power wires for relays or heating elements. This practice would introduce "noise" into the readings and may very likely cause incorrect or erratic temperature readings.
- Do not reposition the thermocouple while the oven is running as it may touch a live heating element and put 120 (or 220) volts through the thermocouple input. This will cause expensive damage and possible shock.
- Do not remove the front cover of the GB1 until all AC power is removed from both the GB1 and all control circuits. This will prevent possible shock to you and damage to your GB1.
- Do not connect 120 (or 220) volts directly to the power connector mounted on the GB1 itself; use the "wall adapter" instead. The GB1 runs on 9 volts DC (unregulated); if you directly connect it to 120 volts, you will ruin it.

4.8 Additional Help

If you have any questions about installing your GB1 after reading this chapter, please call your supplier who will provide you with the information you need.

Chapter 5

Trouble Shooting

There are many things you can do to determine if your GB1 needs to be returned to your supplier for repair or if a problem is due to something outside the GB1.

Typically the voltages involved in the equipment controlled by the GB1 can be lethal. If you do not know how to test this equipment safely, have these tests performed by someone who does.

Problems of an intermittent nature are often caused by poor connections, so the first thing you should do is to make sure that all your connections to the thermocouples and relays are tight.

5.1 Control Problems

If your oven is not heating when it should be, you want to determine whether it is the fault of the GB1. The simplest test is the following:

1. disconnect all power from the contactor control circuit and the GB1.
2. remove the GB1 faceplate as described in section 4.2.
3. either remove the two main relay control wires from the top two terminals on the upper right side and connect them together, or connect these two terminals together with an alligator clip.
4. make sure the above relay control wires are on a non-conductive surface and protected from accidental human contact.
5. re-apply power to the contactor control circuit, but not the GB1.
6. if your oven now comes on, the problem was in the GB1. If it fails to come on, then the problem is external.
7. remove power from the contactor control circuit before you forget.

If the problem is determined to be in the GB1, you should check the fuse in the output module circuit. Again, make sure that all power is removed from the contactor control circuit before commencing this check. The fuse is found just to the left of the 4 position terminal strip and just above and slightly to the right of the output module (black vertical standing box). The fuse looks like a little plastic button. It is in a socket and may be pulled out. It may be hard to determine

visually whether or not the fuse is blown, so either use an ohm meter or simply replace it with a one known to be good. If the fuse is good, then the problem is beyond user repair, and the GB1 must be returned for service. If the fuse is bad, it is remotely possible that there is still damage to the GB1. Replace the fuse and see.

If the problem is external to the GB1, you have to track down whether it is the contactor, the control wiring, or something wrong with the kiln itself.

If your oven continues to heat when the GB1 is in IDLE, it is probably a stuck contactor, although it is possibly caused by a short circuit in the control wiring or a defective output module (internal short circuit). In this latter case you will have to return your GB1 for repair. A test to determine this is simple. Remove power from the contactor control circuit. If the oven continues to heat, then the contactor is stuck. If it is not the contactor, remove the fuse from the output module circuit. If the oven heats when power is re-applied to the control circuit, it must be in the control wiring.

NOTE: It is not possible to use an ordinary ohm meter or continuity checker to determine whether the main control relay output is open or closed. This is because these test instruments are generally DC devices, and the solid-state relay in your GB1 controls only AC. If you need to test the operation of the relay, you must apply an AC voltage of at least 24 volts. To guard against dangerous electrical shock while testing, it is wise to use voltages well below 120 volts.

STILL A NOTE: As the alarm relay is a mechanical relay, the above considerations do not obtain, and you may use ordinary continuity test methods to check its functioning.

5.2 Temperature Problems

If your GB1 appears to display the wrong temperature, the first thing to do is to check its wires and their connections to the GB1 to be sure that they are secure.

The next thing to do is replace the thermocouple; they do wear out over time.

A third possibility is that the GB1's entire internal memory was erased (see section 3.8, page 23). If this happens, the factory adjusted calibration parameters will be lost. This is usually a small annoyance rather than a major problem, because generally the only consequence is that the temperature will be off by a small, constant amount over the entire range. If the GB1 does lose calibration, the STEP display will show the letter `C` twice during the power up countdown (at counts `4` and `2`).

If none of these addresses your problem, you will most likely have to return the unit to Digitry for repair.

Chapter 6

Reference

6.1 GB1 Specifications

The GB1 Programmable Temperature Controller, basic model, is designed for use with a Type K (chromel-alumel) thermocouple. Type R and Type S capabilities, key lock security and customized hardware and software are optional.

Power Requirements: 350 ma. at 9–12 volts DC, unregulated, via a "wall adapter" power supply with a 2.1 mm, center positive, female plug. The standard adapter is for 110–120 VAC, 50–60 cycle. 220 VAC, 50–60 cycle, adapters with various plug styles are available for international use. By special order, the GB1 may be powered by a 12 VAC transformer.

Temperature Range: 32°F to 2550°F (0°C to 1300°C) for Type K; 50°F to 3200°F (10°C to 1760°C) for Type R and Type S, all with automatic cold junction compensation.

Resolution: 1 part in 4100.

Repeatability: 1°.

Common Mode Rejection Rate: at 50 and 60 Hz for Type K, 126 dB minimum; for Type R and Type S, 148 dB minimum.

Output: ON/OFF control via solid-state relay with zero crossing detection; 1 Amp at 20–260 VAC, fused. Minimum load current is 10 milliamperes. Available options:

- 20–240 VAC, 2 Amp.
- 3–12 VDC; 700 milliamperes, maximum.
- internally powered 9 VDC. Available only for direct control of solid-state relays.
- 4–20 milliamp current loop via external module with its own built-in, isolated power source. Available for PID versions only.

Alarm: ON/OFF control via dry contact, reed relay; 2 Amp AC or DC.

Optional Programmable Auxiliary Relay: The following optional programmable auxiliary relays may be ordered in various combinations.

- Dry contact relay, normally open 8 Amp AC or DC.

- Dry contact relay, both normally open and normally closed 10 Amp AC or DC.
- 12 VDC 700 ma power source

Clock: Crystal controlled timer.

Programming: 10 profiles; 15 set-points per profile; maximum of 1,499 hours and 45 minutes in one minute increments per profile; maximum of 14,097 hours and 39 minutes (over a year-and-a-half) using linked profiles.

Dimensions (H × W × D): $4\frac{5}{8} \times 7\frac{1}{2} \times 2\frac{1}{2}$ inches, with $\frac{1}{2}$ inch flanges for mounting on either side of the bottom, bringing its width to $8\frac{1}{2}$ inches.

Shipping Weight: approximately 2.5 pounds.

Operator Interface: $\frac{1}{2}$-inch, 7-segment, red LEDs; 16-button sealed keypad (dust and moisture resistant). Keypad is field replaceable.

All specifications are subject to change from time-to-time.

6.2 Accuracy

While the absolute accuracy of the GB1 is limited to about 1%, the resolution always is approximately 0.5°F. This yields more than 0.025% of full scale reading. With a given GB1 and fixed thermocouple location, your temperature profiles are repeatable to an extremely high degree of accuracy. More variation will be introduced by the way you load your oven than by the accuracy of your readings.

To help ensure this repeatability, all GB1s are equipped with automatic cold junction compensation to account for variations in room temperature. Such variations ordinarily would appear as an error in the temperature reading. This is because a thermocouple measures the difference in temperature between the hot end and the point where it attaches to the GB1; it does not measure absolute temperature.

It is important to realize that because of the resolution of the GB1 temperature measurement, you will note swings in the temperature of your oven that would go unnoticed with a standard, meter type pyrometer. These swings are to be expected. They were always there, you just could not see them. You should notice that the more material you place in your oven, the less severe the swings.

6.3 Sales and Service

Write or call the company that supplied your GB1 for sales, service, and technical information. If you need additional assistance, please contact Digitry directly. You can reach us at

Digitry Company, Inc.
449 Forest Avenue, Suite 9
Portland, ME 04101
USA

Phone: +1 207-774-0300
FAX: +1 617-484-5220

Email: `service@digitry.com`
Web: `http://www.digitry.com/`

6.4 Warranty Information

DIGITRY COMPANY, INC., ("SELLER") WARRANTS THAT THE PROGRAMMABLE TEMPERATURE CONTROLLER ("PRODUCT") SOLD TO PURCHASER SHALL BE OF STANDARD QUALITY OF SELLER. SELLER'S OBLIGATION AND LIABILITY UNDER THIS WARRANTY IS EXPRESSLY LIMITED TO REPAIRING OR REPLACING, AT SELLER'S OPTION, A PRODUCT NOT OF SELLER'S STANDARD QUALITY FOR A PERIOD OF NINETY (90) DAYS FROM THE DATE OF DELIVERY. SELLER MAKES NO OTHER WARRANTY, EXPRESS OR IMPLIED, AND MAKES NO WARRANTY OF MERCHANTABILITY OR OF FITNESS FOR ANY PARTICULAR PURPOSE. SELLER'S OBLIGATION UNDER THIS WARRANTY SHALL NOT INCLUDE ANY TRANSPORTATION CHARGES OR COSTS OF INSTALLATION OR ANY LIABILITY FOR DIRECT, INDIRECT OR CONSEQUENTIAL DAMAGES, DELAY OR LOSS OF PROFITS, EVEN IF SELLER HAS BEEN INFORMED BY PURCHASER OF THE POSSIBILITY OF SUCH DAMAGES.

IF REQUESTED BY SELLER, A PRODUCT ON WHICH A WARRANTY CLAIM IS MADE SHALL BE RETURNED TRANSPORTATION PREPAID TO SELLER'S PRINCIPAL PLACE OF BUSINESS. ANY IMPROPER USE, OPERATION, SUBSTITUTION OF PARTS, OR ALTERATION OR REPAIR BY OTHERS IN SUCH A MANNER AS IN SELLER'S JUDGMENT AFFECTS A PRODUCT MATERIALLY AND ADVERSELY SHALL VOID THIS WARRANTY. NO EMPLOYEE OR REPRESENTATIVE OF SELLER IS AUTHORIZED TO CHANGE THIS WARRANTY IN ANY WAY OR TO GRANT ANY OTHER WARRANTY.

Programming Form

For your convenience, we include a blank Digitry programming form that you can photocopy.

Copy Freely &
Use Genuine Digitry Controllers

Digitry GB1 Programming Form

Profile # _____ *Date* _____

Use _____ *Author* _____

	Step 1	Step 2	Step 3	Step 4	Step 5
Temp					
Time					

	Step 6	Step 7	Step 8	Step 9	Step A
Temp					
Time					

	Step B	Step C	Step D	Step E	Step F
Temp					
Time					

Notes: